SERVICING AND STORMWATER MANAGEMENT REPORT
144 BENTLEY AVENUE – COMMERCIAL WAREHOUSE

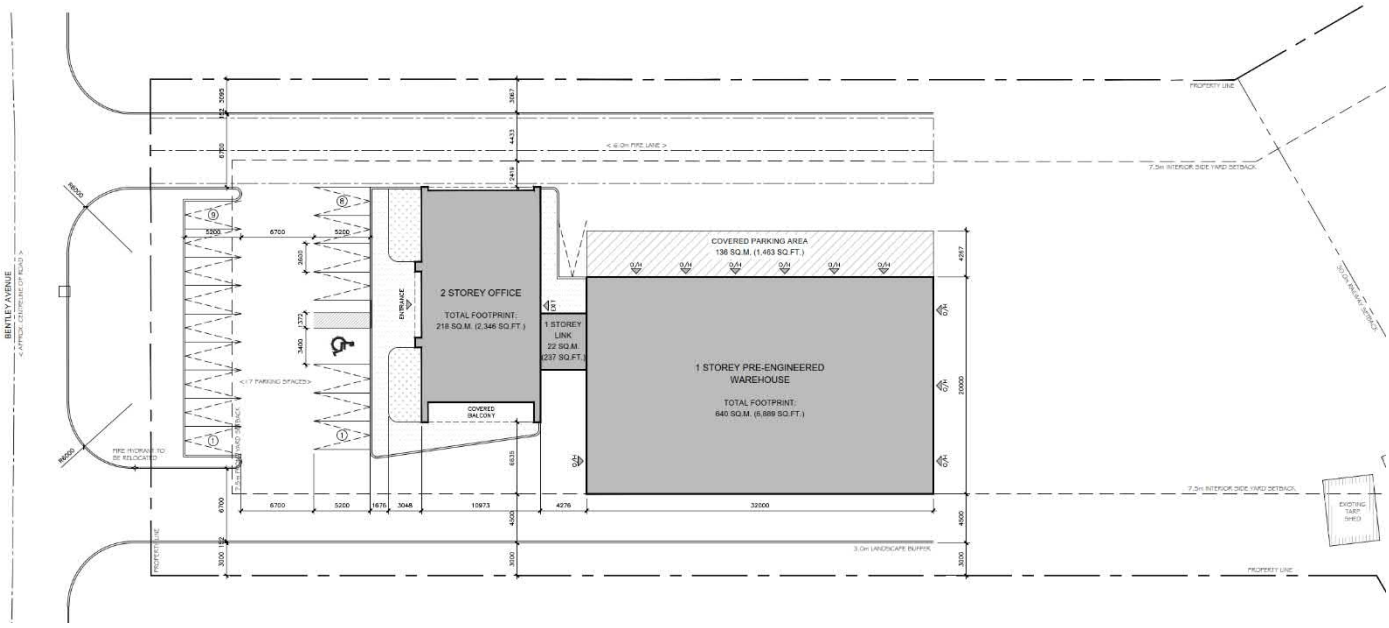

MP Project No.: CCO-21-0675
City File No.: D07-12-20-0113

Prepared for:
Cityscape Div A. Group Inc
PO Box 6937, Station J
Ottawa, Ontario
K2A 3Z5

Prepared by:
McIntosh Perry
115 Walgreen Road
Carp, ON
K0A 1L0

August 12, 2020
Revised: November 6, 2020

McINTOSH PERRY

TABLE OF CONTENTS

1.0 PROJECT DESCRIPTION 1

1.1 Purpose 1

1.2 Site Description 1

2.0 BACKGROUND STUDIES 2

3.0 PRE-CONSULTATION SUMMARY 2

4.0 EXISTING SERVICES 2

5.0 SERVICING PLAN 3

5.1 Proposed Servicing Overview 3

5.2 Proposed Water Design 3

5.3 Proposed Sanitary Design 5

5.4 Proposed Storm Design 5

6.0 PROPOSED STORMWATER MANAGEMENT 6

6.1 Design Criteria and Methodology 6

6.2 Runoff Calculations 6

6.2.1 Pre-Development Drainage 7

6.2.2 Post-Development Drainage 7

6.3 Quantity Control 8

6.4 Quality Control 10

7.0 SEDIMENT EROSION CONTROL 10

7.1 Temporary Measures 10

8.0 SUMMARY 11

9.0 RECOMMENDATIONS 12

10.0 STATEMENT OF LIMITATIONS 13

LIST OF TABLES

Table 1: Water Demands 3
Table 2: Pre-Development Runoff Summary 7
Table 3: Post-Development Runoff Summary 8
Table 4: Allowable Release Rate 8
Table 5: Post-Development Restricted Runoff 9
Table 6: Storage Summary 10

APPENDICES

APPENDIX A: Site Location Map

APPENDIX B: City of Ottawa Pre-Consultation Notes and Correspondence

APPENDIX C: Existing Watermain Flow and Fire Protection Calculations

APPENDIX D: Sanitary Sewer Calculation

APPENDIX E: Pre-Development Drainage Plan

APPENDIX F: Post-Development Drainage Plan

APPENDIX G: Stormwater Management Calculations

APPENDIX H: Hydro International First Defence Unit

APPENDIX I: City of Ottawa Design Checklist

1.0 PROJECT DESCRIPTION

1.1 Purpose

McIntosh Perry (MP) has been retained by Cityscape to prepare this Servicing and Stormwater Management Report in support of the Site Plan Control process for the proposed commercial warehouse, located at 144 Bentley Avenue within the City of Ottawa.

The main purpose of this report is to present a servicing design for the development in accordance with the recommendations and guidelines provided by the City of Ottawa (City), the Rideau Valley Conservation Authority (RVCA), and the Ministry of the Environment, Conservation and Parks (MECP). This report will address the water, sanitary and storm sewer servicing for the development, ensuring that existing and available services will adequately service the proposed development.

This report should be read in conjunction with the following drawings:

- CCO-21-0675, C101 – Site Grading, Drainage and Erosion & Sediment Control Plan, and
- CCO-21-0675, C102 – Site Servicing Plan.

1.2 Site Description

The property is located at 144 Bentley Avenue, within the City of Ottawa. It is described as Part of Lot 13, Registered Plan 459792 and Part of Lot 27, Concession A (Rideau Front), Geographic Township of Nepean, City of Ottawa. The developable land in question covers approximately 0.9 ha and is located on the south side of Bentley Avenue.

The existing site is currently undeveloped with gravel throughout the entire site area with some piled material. There is a rectangular piece of the property at the southeast extent of the site which is located adjacent to the Canadian National Railway (CNR). All of the development for this site will remain towards the front of the site along Bentley Avenue and away from the CNR.

Adjacent to the property along the west is an undeveloped gravel yard whereas the east adjacent property consists of fuel storage.

The proposed development consists of a two storey office building totaling 223 m^2 as well as a 1 storey warehouse with a building footprint of 640 m^2. Parking and drive aisles will be provided at the front of the site with storage located at the back of the site. Landscaping will be located at the front of the site along the street as well as along the perimeter of the property. There will be two site accesses for the development. A site location plan has been provided in Appendix A for reference.

2.0 BACKGROUND STUDIES

Background studies that have been completed for the site include a review of the City of Ottawa as-built drawings, a topographical survey of the site, a geotechnical report and a Phase I Environmental Site Assessment (ESA).

As-built drawings of the existing services within the vicinity of the site were reviewed in order to determine proper servicing and stormwater management schemes for the site.

A topographic survey of the site was completed by Annis, O'Sullivan, Vollebekk Ltd. dated July 20th, 2020 and can be found under separate cover.

The following reports have previously been completed and are available under separate cover:

- Geotechnical Investigation completed by Paterson Group dated August 11, 2020.
- Phase I ESA completed by Paterson Group.

3.0 PRE-CONSULTATION SUMMARY

City of Ottawa Staff have been pre-consulted regarding this proposed development via conference call on January 22, 2020. Specific design parameters to be incorporated within this design include the following:

- Quantity control to restrict flows from the 100 year post development storm to the 5 year pre development flow rate using a runoff coefficient 'C' of 0.5 or existing (whichever is smaller)
- Time of Concentration (Tc) cannot be less than 10 min;
- Flows to the storm sewer in excess of the allowable release rate, up to and including the 100-year storm event, must be detained on site;
- The downstream pond facility does not provide quality control for storm runoff, therefore, the site will require on-site quality control at an enhanced level (80% TSS removal), and
- Best management practices are to be employed on site.

Pre-Consultation notes from the City can be found in Appendix 'B'.

4.0 EXISTING SERVICES

There is an existing 675 mm diameter sanitary sewer as well as a 1050 mm storm sewer located within Bentley Avenue. There is also a 305 mm diameter watermain within Bentley Avenue and fire hydrants located along the south side of the street.

5.0 SERVICING PLAN

5.1 Proposed Servicing Overview

The overall servicing will be provided via service connections to the mains within Bentley Avenue. The water service will be extended from the 305 mm diameter watermain. Similarly, the storm and sanitary services will be connected to the 1050 mm storm sewer and 675 mm sanitary main. Details pertaining to the final proposed servicing locations have been reviewed and are shown on the proposed Site Servicing Plan included within the submission package.

5.2 Proposed Water Design

A new 150 mm PVC diameter water service will be connected to the existing 305 mm PVC watermain within Bentley Avenue, complete with a water valve located at the property line. The existing fire hydrants within Bentley Avenue will be used to service the site with fire protection. The water service is designed to have a minimum of 2.4 m of cover.

The Fire Underwriters Survey 1999 (FUS) method was utilized to determine the required fire flow for the site. The 'C' factor (type of construction) for the FUS calculation was determined to be 1.0 (ordinary type construction). The total floor area ('A' value) for the FUS calculation was determined to be 1,113 m^2. The results of the calculations yielded a required fire flow of 8,000 L/min. A fire flow of 2,700 L/min was calculated using the Ontario Building Code (OBC) requirements. The detailed calculations for the FUS and OBC can be found in Appendix 'C'.

The water demands for the proposed building have been calculated to adhere to the *Ottawa Design Guidelines – Water Distribution* manual and can be found in Appendix 'C'. The results have been summarized below:

Table 1: Water Demands

Site Area	0.9 ha
Industrial - Light	35,000 L/ha/day
Average Day Demand (L/s)	0.36
Maximum Daily Demand (L/s)	0.55
Peak Hourly Demand (L/s)	0.98
OBC Fire Flow Requirement (L/s)	45.00
FUS Fire Flow Requirement (L/s)	133.33

Boundary conditions have been provided by the City of Ottawa and are available in Appendix 'C'. A water model was completed using Bentley's WaterCAD based on the boundary conditions. The results determined that the proposed 150mm watermain can adequately service the proposed development and the City main can provide sufficient fire flow since Hydrant H-1 produced available fire flows of 15,043.17,137 L/min. Refer to the Site Servicing Plan for more details. The results are available in Appendix 'C' of this report.

The normal operating pressure range is anticipated to be 287 kPa to 422 kPa for existing condition and 462 kPa to 570 kPa. The proposed watermain will meet the minimum required 20 psi (140 kPa) at the ground level under maximum day demand and fire flow conditions.

Table 2: Water Pressure at Junctions per Scenario

Junction	Average Day (psi)	Peak Hourly (psi)	Max. Day + Fire Flow (psi)
J-1 (BLDG)	65.82	54.46	39.27

To confirm the adequacy of fire flow to protect the proposed development, public and private fire hydrants within 150 m of the proposed building were analysed per City of Ottawa ISTB 2018-02 Appendix I Table 1. The results are demonstrated below.

Table 3: Fire Protection Confirmation

Building	Fire Flow Demand (L/min.)	Fire Hydrant(s) within 75m	Fire Hydrant(s) within 150m	Combined Fire Flow (L/min.)
144 Bentley Avenue	8,000	2	2	19,000

5.3 Proposed Sanitary Design

A new 150 mm diameter gravity sanitary service will be connected to the existing 675 mm diameter sewer within Bentley Avenue. The sanitary service will be complete with a maintenance manhole (MH1A) just inside the property line as per the City of Ottawa – Sewer Design Guidelines, October 2012, Clause 4.4.4.7 and City of Ottawa Sewer-Use By-Law 2003-514 (14).

The proposed 150mm diameter gravity sanitary service will be installed with a minimum full flow target velocity (cleansing velocity) of 0.6 m/s and a full flow velocity of not more than 3.0 m/s. Design parameters for the site include an infiltration rate of 0.33 L/s/ha.

The subject site is a proposed office/warehouse facility. The total area of the building is 863 m^2. The peak design flows for the proposed building were calculated using criteria from the *City of Ottawa – Sewer Design Guidelines, October 2012*. The peak design flow for the proposed site was determined to be 2.78 L/s, therefore the proposed 150 mm diameter lateral has sufficient capacity to convey the flows (See Appendix 'D' for detailed calculations). It is anticipated that there will be no issues with capacity constraints within the proposed lateral or within the existing sanitary main within Bentley Avenue as the amount of flow leaving the site is minimal.

5.4 Proposed Storm Design

Stormwater runoff will be conveyed by way of overland sheet flow and a proposed storm sewer network. Runoff will be concentrated within the asphalt areas where it will flow towards the proposed catchbasins to then be conveyed through the on-site stormwater management system to the existing 1050 mm storm sewer within Bentley Avenue. The site will be constructed with adequate grading to ensure that all areas on the site are able to reach a suitable outlet and to ensure that the post-development restriction is achieved. Please see the Lot Grading, Drainage and Sediment & Erosion Control Plan for detailed locations of the proposed stormwater infrastructure. The direction and location of overland sheet flow has also been indicated.

Stormwater management (SWM) design for the site will make use of on-site storage with an inlet control device (ICD). The intent of the overall stormwater management design is to provide a system capable of capturing runoff, restricting flows to allowable flow rate, and providing the on-site storage necessary to accommodate the reduced runoff rate. In the event of a failure or blockage within the system, stormwater will be conveyed to Bentley Avenue. The stormwater management design will be further detailed in Section 6.0.

6.0 PROPOSED STORMWATER MANAGEMENT

6.1 Design Criteria and Methodology

Stormwater management for this site will be maintained through positive drainage away from the proposed building and into a new storm sewer system within the site. This SWM plan will implement quantity control strategies. The storm runoff will enter the pipe system through catchbasins (CB's) and catchbasin manholes (CBMH's) located throughout the site. The restricted stormwater runoff will be directed to the existing sewer within Bentley Avenue; similarly, overland flow will be directed towards Bentley Avenue through the proposed drainage patterns. The quantitative and qualitative properties of the storm runoff for both the pre- and post-development flows are further detailed below. Stormwater Best Management Practices (SWM BMP's) will be implemented at the "Lot level", "Conveyance" and "End of Pipe" locations. These concepts will be explained further in Section 6.3.

In summary, the following design criteria have been employed in developing the stormwater management design for the site as directed by the RVCA and the City:

<u>Quality Control</u>

- Enhanced (80% TSS removal) quality control is required. Quality control will be provided via an oil and grit separator.

<u>Quantity Control</u>

- Post-development flow (5 & 100 year) is to be restricted to match the 5-year pre-development flow with a C value of 0.5 and time of concentration (Tc) of 10 minutes.

6.2 Runoff Calculations

Runoff calculations presented in this report are derived using the Rational Method, given as:

$$Q = 2.78CIA \text{ (L/s)}$$

Where	C	= Runoff coefficient
	I	= Rainfall intensity in mm/hr (City of Ottawa IDF curves)
	A	= Drainage area in hectares

It is recognized that the rational method tends to overestimate runoff rates. As a by-product of using extremely conservative prediction method, any facilities that are sized using these results are expected to function as intended in real world conditions.

The following coefficients were used to develop an average C for each area:

Roofs/Concrete/Asphalt	0.90
Gravel	0.60
Undeveloped and Grass	0.20

As per the City of Ottawa Sewer Design Guidelines, the 5-year balanced 'C' value must be increased by 25% for a 100-year storm event to a maximum of 1.0.

As per the pre-consultation meeting with the City of Ottawa the time of concentration (Tc) used for pre-development shall be calculated using a time of concentration (Tc) not less than 10 minutes and post-development flows shall be calculated using a time of concentration (Tc) of 10 minutes.

6.2.1 Pre-Development Drainage

The existing site has been demonstrated as drainage area A1. The Pre-development Drainage Area Plan indicates the limits of the drainage area, see CCO-21-0675 – PRE in Appendix 'E' of this report for more details. Drainage area A1 represents the flow that goes to the Bentley Avenue right of way. The development area is covered entirely with gravel. A summary of the pre-development runoff calculations can be found below.

Table 4: Pre-Development Runoff Summary

Area ID	Drainage Area (ha)	5-Year Runoff Coefficient	100-Year Runoff Coefficient	T_c (min)	Unrestricted 5-year Peak Flow (L/s)	Unrestricted 100-year Peak Flow (L/s)
A1	0.90	0.58	0.72	10	151.25	321.51
Total	**0.90**				**151.25**	**321.51**

See CCO-21-0675 – PRE in Appendix 'E' and Appendix 'G' for calculations

6.2.2 Post-Development Drainage

The proposed site drainage limits are demonstrated on the Post-Development Drainage Area Plan. See CCO-21-0675 – POST in Appendix 'F' of this report for more details. A summary of the Post-Development Runoff Calculations can be found below.

Table 5: Post-Development Runoff Summary

Area ID	Drainage Area (ha)	5-Year Runoff Coefficient	100-Year Runoff Coefficient	T_c (min)	Unrestricted 5-year Peak Flow (L/s)	Unrestricted 100-year Peak Flow (L/s)
B1	0.04	0.42	0.49	10	4.84	9.60
B2	0.06	0.81	0.91	10	12.96	24.77
B3	0.05	0.84	0.93	10	13.32	25.43
B4	0.07	0.82	0.91	10	16.25	31.05
B5	0.55	0.61	0.75	10	96.90	204.02
B6	0.08	0.84	0.94	10	19.45	37.13
B7	0.05	0.85	0.95	10	12.48	23.82
Total	**0.90**				**176.21**	**355.82**

See CCO-21-0675 – POST in Appendix 'F' and Appendix 'G' for calculations

Runoff will be captured and conveyed to a new storm sewer network which will connect to the existing 1050 mm storm sewer within Bentley Avenue. In order to match pre-development flows, on site storage will be required. Storage will be provided above the CB's and CBMH's located around the building. All other runoff with exception to drainage area B1 will be captured and directed to the proposed storm network. An Inlet control device within MH1 will then restrict all the captured runoff to the 5-year pre-development flow. See Appendix 'G' for calculations.

6.3 Quantity Control

After discussing the stormwater management criteria for the site with City staff, the total post-development runoff for this site has been restricted to match the 5-year pre-development flow rates with a C value of 0.5. (See Appendix 'B' for pre-consultation notes). These values create the following allowable release rates and storage volumes for the development site.

Table 6: Allowable Release Rate

Area ID	Drainage Area (ha)	Runoff Coefficient	T_c (min)	Required Restricted Flow 5-year (L/s)
A1	0.90	0.5	10	129.86
Total	**0.90**			**129.86**

See Appendix 'G' for calculations

Reducing site flows will be achieved using flow restrictions and will create the need for onsite storage. Runoff from areas B2-B7 will be restricted as detailed in the table below.

Table 7: Post-Development Restricted Runoff

Area ID	Drainage Area (ha)	5-Year Runoff Coefficient	100-Year Runoff Coefficient	T_c (min)	Restricted 5-year Peak Flow (L/s)	Restricted 100-year Peak Flow (L/s)
B1	0.04	0.42	0.49	10	4.84	9.60
B2	0.06	0.81	0.91	10	116.30	120.27
B3	0.05	0.84	0.93	10		
B4	0.07	0.82	0.91	10		
B5	0.55	0.61	0.75	10		
B6	0.08	0.84	0.94	10		
B7	0.05	0.85	0.95	10		
Total	**0.90**				**121.14**	**129.86**

See Appendix 'G' for calculations

Runoff from Area B2 through B7 will be restricted at MH1 through a Hydrovex 300VHV-2 (or approved equivalent) ICD (Design Head of 2.27). This ICD will restrict areas B2 through B7 to 116.30 L/s for the 5-year and 120.27 L/s for the 100-year storm event. The restriction creates a required storage volume of 35.61 m^3 and a corresponding water surface elevation (WSEL) of 88.59 m for the 5-year storm event. Likewise, the restriction creates required storage volume of 139.78 m^3 and a WSEL of 88.70 m for the 100-year storm event. The storage for these areas will be provided above the CB's and MH's throughout the site. Table 8 details the required and provided storage volumes for the site. Runoff from area B1 will be unrestricted and follow existing drainage patterns.

As per City standards, no ponding of water is to be located above CB's and CBHM's in parking/drive aisle areas for the 2 year storm event. The flow leaving the site during the 2 year storm event will be 93.72 L/s. The restriction creates a required storage volume of 24.76 m^3. The pipe network through the site including the structures themselves provide a storage volume of 28.95 m^3. Therefore, all storage for the 2 year storm event is provided below ground.

In the event that there is rainfall above the 100-year storm event, or a blockage within the storm network occurs, an emergency overland flow route has been provided for the entire site such that the storm water runoff will be conveyed away from the buildings and off of the site towards Bentley Avenue. The following table summarizes the storage requirements during the 5 and 100-year storm events and the provided storage volumes.

It should be noted that the available storage for the 5 and 100 year storm events **do not** include underground storage. Alternatively, the available storage for the 2 year storm event **does not** include above ground storage. No combination of above and below storage is being used for any one storm event, therefore, there is no requirement to halve the restricted flow rate or double the available capacity of the storage system.

Table 8: Storage Summary

Drainage Area	Depth of Ponding (m)	Storage Required (m^3)	Storage Available (m^3)	Depth of Ponding (m)	Storage Required (m^3)	Storage Available (m^3)	Depth of Ponding (m)	Storage Required (m^3)	Storage Available (m^3)
	2-Year			5-Year			100-Year		
B2-B7	NA	24.76	28.95	0.19	36.33	36.34	0.30	141.21	141.33

See Appendix 'G' for calculations

6.4 Quality Control

The development of this lot will employ Best Management Practices (BMP's) wherever possible. The intent of implementing stormwater BMP's is to ensure that water quality and quantity concerns are addressed at all stages of development. Lot level BMP's typically include temporary retention of the parking lot runoff, minimizing ground slopes and maximizing landscaped areas. Some of these BMP's cannot be provided for this site due to site constraints and development requirements.

As per the discussions with the RVCA and the City, the downstream pond facility does not provide quality control, therefore, on-site quality control at an enhanced level is required prior to site runoff entering the storm system within Bentley Avenue.

A quality treatment unit manufactured by Hydro International First Defence unit has been proposed downstream of MH1 to provide 80% TSS removal. Refer to Appendix 'H' for more information.

7.0 SEDIMENT EROSION CONTROL

7.1 Temporary Measures

Before construction begins, temporary silt fence, straw bale or rock flow check dams will be installed at all-natural runoff outlets from the property. For this Project, areas of concern include the roadside ditches along the property line where runoff and sheet flow may leave the property. It is crucial that these controls be maintained throughout construction and inspection of sediment and erosion control will be facilitated by the Contractor or Contract Administration staff throughout the construction period.

Silt fences will be installed where shown on the final engineering plans, specifically along the downstream property limits. The Contractor, at their discretion or at the instruction of the City of Ottawa, RVCA or the Contract Administrator shall increase the quantity of sediment and erosion controls on-site to ensure that the site is operating as intended and no additional sediment finds its way off site. The rock flow, straw bale & silt fence check dams and barriers shall be inspected weekly and after rainfall events. Care shall be taken to properly remove sediment from the fences and check dams as required. Geosock is to be installed under the grates of all existing structures along the frontage of the site and any new structures immediately upon installation. The Geosock is to be removed only after all areas have been paved. Care shall be taken at the

removal stage to ensure that any silt that has accumulated is properly handled and disposed of. Removal of silt fences without prior removal of the sediments shall not be permitted.

Although not anticipated, work through winter months shall be closely monitored for erosion along sloped areas. Should erosion be noted, the Contractor shall be alerted and shall take all necessary steps to rectify the situation. Should the Contractor's efforts fail at remediating the eroded areas, the Contractor shall contact the RVCA to review the site conditions and determine the appropriate course of action. As the ground begins to thaw, the Contractor shall place silt fencing at all required locations as soon as ground conditions both warrant and permit. Please see the Site Grading and Drainage Plan for additional details regarding the temporary measures to be installed and their appropriate OPSD references.

8.0 SUMMARY

- A new 2 storey office and warehouse will be constructed on the site located at 144 Bentley Avenue.
- A new 150 mm diameter sanitary service and monitoring manhole will be installed and connected to the existing 675 mm diameter sewer within Bentley Avenue.
- A new 150mm diameter water lateral will be extended from the existing 305 mm diameter main within Bentley Avenue to service the development.
- A new storm network will be installed onsite and will connect to the existing 1050 mm storm sewer within Bentley Avenue.
- As discussed with the City of Ottawa staff, the stormwater management design will ensure that the post-development flow rates are restricted to the 5-year pre-development flow rate calculated with a C value of 0.5.
- Storage for the 5- through 100-year storm events will be provided above the CB's and CBMH's located within the asphalt areas of the site.
- Hydro International First Defense Units will be provided to meet the enhanced level of quality control for the site as per the RVCA.

9.0 RECOMMENDATIONS

Based on the information presented in this report, we recommend that City of Ottawa approve this Servicing and Stormwater Management Report in support of the proposed office/warehouse development at 144 Bentley Avenue.

The sediment and erosion control plan outlined in Section 7.0 and detailed in the Grading and Drainage Plan notes are to be implemented by the contractor.

This report is respectfully being submitted for approval.

Ryan Kennedy, P.Eng.
Practice Area Lead – Land Development
McIntosh Perry Consulting Engineers
T: 613.903.5766
E: r.kennedy@mcintoshperry.com

10.0 STATEMENT OF LIMITATIONS

This report was produced for the exclusive use of Cityscape Div A. Group Inc. The purpose of the report is to assess the existing stormwater management system and provide recommendations and designs for the post-construction scenario that are in compliance with the guidelines and standards from the Ministry of the Environment and Climate Change, City of Ottawa and local approval agencies. McIntosh Perry reviewed the site information and background documents listed in Section 2.0 of this report. While the previous data was reviewed by McIntosh Perry and site visits were performed, no field verification/measures of any information were conducted.

Any use of this review by a third party, or any reliance on decisions made based on it, without a reliance report is the responsibility of such third parties. McIntosh Perry accepts no responsibility for damages, if any, suffered by any third party as a result of decisions or actions made based on this review.

The findings, conclusions and/or recommendations of this report are only valid as of the date of this report. No assurance is made regarding any changes in conditions subsequent to this date. If additional information is discovered or becomes available at a future date, McIntosh Perry should be requested to re-evaluate the conclusions presented in this report, and provide amendments, if required.

APPENDIX A
SITE LOCATION MAP

McINTOSH PERRY

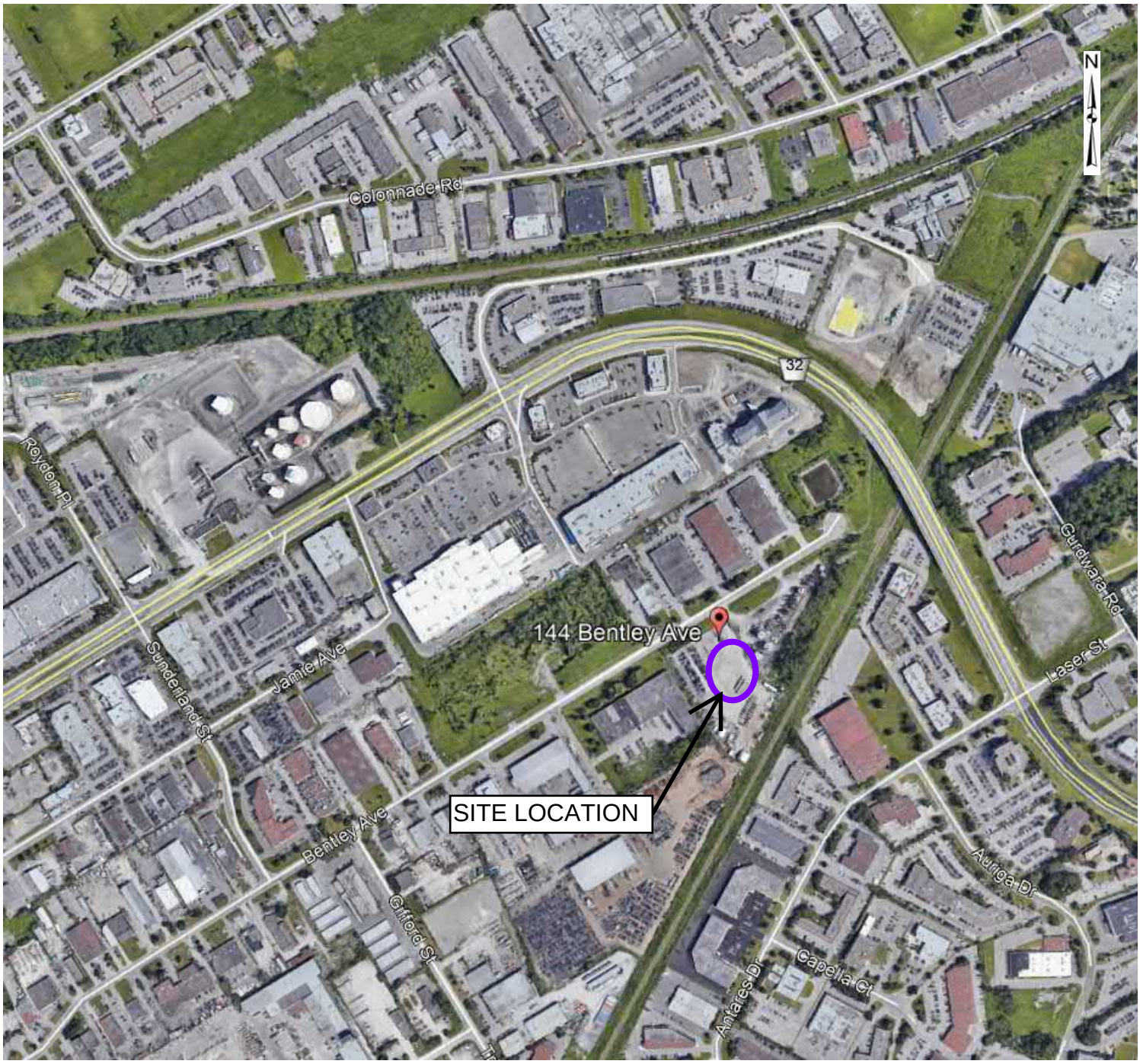

LEGEND

- Site Location
- Local Road
- Major Road

CLIENT:
CITYSCAPE

PROJECT:
CITYSCAPE COMMERCIAL WAREHOUSE

TITLE:
SITE LOCATION

McINTOSH PERRY
115 Walgreen Road, RR3, Carp, ON K0A1L0
Tel: 613-836-2184 Fax: 613-836-3742
www.mcintoshperry.com

PROJECT NO:		FIGURE:
Date	Aug 12	1
GIS	N/A	
Checked By	CJM	

U:\Ottawa\01 Project - Proposals\2020 Jobs\CP\0CP-Projects\0CP-20-0023 BBS_SPC Warehouse_2 Bill Leatham Drive\GIS\mxd\CP-20-0023_01_SiteLocation_Proposed Warehouse.mxd

APPENDIX B
CITY OF OTTAWA PRE-CONSULTATION NOTES

McINTOSH PERRY

File No.: PC2020-0153
July 9, 2020

Pre-Application Consultation Meeting Notes

Property Address: 144144 Bentley Avenue
File No.: PC2020-0153
Date: July 2, 2020, 1:00 – 2:00 PM, Held via Teleconference

Subject: Pre-Application Consultation Meeting Minutes
144 Bentley Avenue

Attendees: Colette Gorni – Planner, City of Ottawa
Josiane Gervais – Project Manager (Transportation), City of Ottawa
Santhosh Kuruvilla – Project Manager (Infrastructure), City of Ottawa
Randolph Wang – Planner (Urban Design), City of Ottawa
Alison Stirling – Consultant, The Stirling Group
Jack Stirling – Consultant, The Stirling Group
Curtis Melanson – Civil Engineering Consultant, McIntosh Perry
Brandon Lawrence – Architect, S.J. Lawrence Architect Inc.
Gino Aiello – Property Owner
Frank Aiello – Property Owner

Regrets: Justyna Garbos – Planner (Parks), City of Ottawa
Sami Rehman – Planner (Environment), City of Ottawa
Mark Richardson – Forester (Planning), City of Ottawa

Comments from the Applicant:

1. The applicant is proposing to build a 12,500 square feet warehouse and office building with associated parking at the front of the site and associated outdoor storage at the rear. The proposed building will be mainly warehouse space, with a small office at the front.

2. The perimeter of the site will be fenced for security purposes. There will also be a portion of the interior of the site that will be fenced, which is intended to be used for the outdoor storage of vehicles and equipment.

3. Two one-way accesses are provided along Bentley Avenue to provide access to the site.

Staff Comments:

Planning

1. The subject site is within the Smith Falls rail corridor, which is considered an active rail corridor. Therefore, please note that all proposed buildings should be located outside the 30-metre setback area.

2. Please ensure that vehicle parking is provided in accordance with the rates set out in Section 101 of the Zoning By-law for Area C on Schedule 1A:

    - Warehouse – 0.8 per 100 m^2 of gross floor area;
    - Office – 2.4 per 100 m^2 of gross floor area; and,
    - Storage Yard – 1 per 100 m^2 of gross floor area.

3. Please ensure that bicycle parking is provided in accordance with the rates set out in Section 111 of the Zoning By-law for Area C on Schedule 1A:

    - Warehouse – 1 per 2000 m^2 of gross floor area;
    - Office – 1 per 250 m^2 of gross floor area; and,
    - Storage Yard – 1 per 2000 m2 of gross floor area.

4. Parks will collect cash-in-lieu of parkland calculated at 2% of the gross land area of the site being developed. The applicant will also be required to pay a $565 (including HST) fee for appraisal services.

5. The proposed development is subject to Site Plan Control and will be a "New – Site Plan Control – Standard" application. Application, timeline and fees can be found here.

6. You are encouraged to contact the Ward Councillor, Councillor Keith Egli, at Keith.Egli@ottawa.ca about the proposal.

Engineering

1. The Servicing Study Guidelines for Development Applications are available at the following link: https://ottawa.ca/en/city-hall/planning-and-development/information-developers/development-application-review-process/development-application-submission/guide-preparing-studies-and-plans

2. Record drawings and utility plans are available for purchase from the City's Information Centre. Contact the City's Information Centre by email at informationcentre@ottawa.ca or by phone at (613) 580-2424 x44455

3. Stormwater quantity control criteria – control the 100-year release rate to the 5-year using C= 0.5 or existing (whichever is smaller) and TC = no less than 10 minutes.

4. Stormwater quality control criteria – Contact the Conservation Authority (RVCA-Rideau Valley Conservation Authority) for their requirements. Include the correspondence in the Stormwater Management Report / Site Servicing Report. An oil grit separator may be required for this development. Please confirm this requirement with RVCA.

5. Existing sanitary sewer (675 mm diameter) is available on Bentley Ave. to make lateral service connection. Please ensure the existing sewer has adequate capacity to receive flow from this site.

6. Existing watermain (305 mm diameter) is available on Bentley Ave. for service connection.

7. Existing storm sewer (1050 mm diameter) is available on Bentley Ave. for lateral service connection. Please ensure the existing sewer has adequate capacity to receive flow from this site.

8. MECP ECA (Environmental Compliance Approval) is required due to Industrial Zoning. ECA application will be direct submission to MECP.

9. As per the City of Ottawa Slope Stability Guidelines for Development Applications an engineering report is required for any retaining walls proposed 1.0 m or greater in height within the subject site that addresses the global stability of the wall and provides structural details. A Retaining Wall Stability Analysis Report and Retaining Wall Structural Details are required to be provided from a Professional Engineer licensed in the Province of Ontario that demonstrates the proposed retaining wall structure has been assessed for global instability as per City standards. Please ensure the analysis and required documentation are provided with the next submission to address this comment.

10. Emergency fire routes will need to be satisfactory to Fire Services. Please show fire routes on the site plan. For information regarding fire route provisions, please consult with Jennifer Therkelsen at Jennifer.Therkelsen@ottawa.ca.

11. Clearly show and label the property lines on all sides of the property.

12. Clearly show and label all the easements (if any) on the property, on all plans.

13. When calculating the post development composite runoff coefficient (C), please provide a drawing showing the individual drainage area and its runoff coefficient.

14. When using the modified rational method to calculate the storage requirements for the site, the underground storage should not be included in the overall available storage. The modified rational method assumes that the restricted flow rate is constant throughout the storm which, in this case, underestimates the

storage requirement prior to the 1:100-year head elevation being reached. Alternately, if you wish to include the underground storage, you may use an assumed average release rate equal to 50% of the peak allowable rate. Otherwise, disregard the underground storage as available storage or provide modeling to support the design.

15. Engineering plans are to be submitted on standard A1 size (594mm x 841mm) sheets.

16. Phase 1 ESA and Phase 2 ESA must conform to clause 4.8.4 of the Official Plan that requires that development applications conform to Ontario Regulation 153/04.

17. Provide the following information for water main boundary conditions:

    a. Location map with water service connection location
    b. Average daily demand (l/s)
    c. Maximum daily demand (l/s)
    d. Maximum hourly demand (l/s)
    e. Fire flow demand (provide detailed fire flow calculations based on the fire underwriters survey method)

18. If you are proposing any exterior light fixtures, all must be included and approved as part of the site plan approval. Therefore, the lights must be clearly identified by make, model and part number. All external light fixtures must meet the criteria for full cut-off classification as recognized by the Illuminating Engineering Society of North America (IESNA or IES) and must result in minimal light spillage onto adjacent properties (as a guideline, 0.5 fc is normally the maximum allowable spillage). In order to satisfy these criteria, the applicant must provide certification from an acceptable professional engineer. The location of all exterior fixtures, a table showing the fixture types (including make, model, part number), and the mounting heights must be included on a plan.

Feel free to contact Santhosh Kuruvilla, Project Manager (Infrastructure), at Santhosh.Kuruvilla@ottawa.ca, for follow-up questions.

Transportation

1. Follow Traffic Impact Assessment Guidelines:

    a. Based upon the plan presented today, a TIA is not required.
    b. Submit Screening form as soon as possible for official sign-off. Then submit Screening Form with the application.

2. On site plan:

    a. Show all details of the roads abutting the site up to and including the opposite curb; include such items as pavement markings, accesses and/or sidewalks.
    b. Turning movement diagrams required for all accesses showing the largest vehicle to access/egress the site (emergency vehicles, garbage).
    c. Turning movement diagrams required for internal movements (loading areas, garbage).
    d. Show all curb radii measurements; ensure that all curb radii are reduced as much as possible.
    e. Show dimensions of lane/aisle widths.
    f. Ensure the accesses meet the City's Private Approach Bylaw.
    g. Grey out any area that will not be impacted by this application.

3. AODA legislation is in effect for all organizations, please ensure that the design conforms to these standards.

4. Noise Impact Studies required for the following:

    c. Rail – Smiths Falls Rail Corridor runs along the back-property line.
    d. Aircraft – Site falls within the *Airport Vicinity Development Zone*.

Feel free to contact Josiane Gervais, Project Manager (Transportation), at Josiane.Gervais@ottawa.ca, for follow-up questions.

Urban Design

1. A Design Brief is required as part of the submission. The Terms of Reference of the Design Brief is attached for convenience.

Environmental Planning

1. No concerns.

Forestry

1. If there are trees present, a tree permit is required prior to any removal on site.

2. If there are trees present, they will need to submit a Tree Conservation Report, but it may be combined with the LP.

3. The applicant can contact Mark Richardson for information on submitting a TCR and obtaining a permit – mark.richardson@ottawa.ca

Corporate Real Estate Office (CREO)

1. REPDO has adopted the Guidelines for New Development in Proximity to Rail Operations, created by the Railway Association of Canada and the Federation of Canadian Municipalities, see: http://proximityissue.wpengine.com/wp-content/uploads/2017/09/2013_05_29_Guidelines_NewDevelopment_E.pdf

    - The main objective is to mitigate railway-oriented impacts such as noise, vibration, and safety hazards, to ensure that the quality of life of a building's occupants and users are not negatively affected and to the maintain the long-term integrity and viability of the corridor.

2. The guidelines are intended to be applied primarily to new residential development but are applicable to other sensitive/occupied dwellings.

3. According the guidelines, a 30-metre setback from the property line to the face of the building is recommended combined with an earthen berm 2 meters above grade (2.5:1) (see page 27 & 38). It is also recommended that a noise and vibration study should be conducted according to page 28 of the guidelines.

4. Appropriate uses within the 30-metre setback area include public and private roads; landscaping, parking spaces/structures; and storage sheds.

5. Consideration to reducing the stated setback is possible subject to engineered mitigation measures. (such as a crash wall, larger berm etc.)

6. In addition, the guidelines recommended that the future potential and the existence of the rail corridor be registered on title. The following clause should be inserted in all developments, offers to purchase, and agreements of Purchase and Sale or Lease for all developments within 300 meters of the railway right-of-way:

    Warning: The City of Ottawa or its assigns or successors in interest has or have a right-of-way within 300 metres from the land subject hereof. There may be alteration to or expansions of the railway facilities on such rights-of-way in the future including the possibility that the railway or its assigns or successors as aforesaid may expand its operations, which expansion may affect the environment of the occupants in the vicinity, notwithstanding the inclusion of any noise and vibration attenuating measures in the design of the development and individual dwellings. The City of Ottawa will not be responsible for any complaints or claims arising from use of such facilities and/or operations on, over or under the aforesaid rights-of-way

Please refer to the links to "Guide to preparing studies and plans" and fees for further information. Additional information is available related to building permits, development charges, and the Accessibility Design Standards. Be aware that other fees and permits may be required, outside of the development review process. You may obtain background drawings by contacting informationcentre@ottawa.ca.

These pre-application consultation comments are valid for one year. If you submit a development application(s) after this time, you may be required to meet for another pre-consultation meeting and/or the submission requirements may change. You are as well encouraged to contact us for a follow-up meeting if the plan/concept will be further refined.

Feel free to contact Colette Gorni at colette.gorni@ottawa.ca if you have any questions.

Curtis Melanson

From: Kuruvilla, Santhosh <Santhosh.Kuruvilla@ottawa.ca>
Sent: July 23, 2020 10:14 AM
To: Curtis Melanson
Subject: FW: 144 Bentley Avenue

Hi Curtis,

Please see correction below.

Santhosh

From: Kuruvilla, Santhosh
Sent: July 22, 2020 6:50 PM
To: Curtis Melanson <c.melanson@mcintoshperry.com>
Subject: RE: 144 Bentley Avenue

Hello Curtis,

I checked with our Stormwater Branch regarding your question below and following is the response I received:

"Hi Santhosh,

Per your latest email, I just want to reinforce Eva's note that the Bentley SWM facility was not designed for water quality treatment. Therefore, on-site WQ treatment will be required for the proposed site plan. This facility was only designed to provide detention of the 5-year event from the Bentley Avenue sewer drainage area. We have a couple of reports that speak to the design of the Bentley SWM facility – as mentioned by Eva below. If you would like copies, please don't hesitate to reach out to Eva.

Cheers,
Ryan "

Therefore, you will have to provide onsite treatment to satisfy ~~MVCA~~ **RVCA** criteria.

Thanks,

Santhosh

From: Curtis Melanson <c.melanson@mcintoshperry.com>
Sent: July 20, 2020 10:07 AM
To: Kuruvilla, Santhosh <Santhosh.Kuruvilla@ottawa.ca>
Subject: FW: 144 Bentley Avenue

CAUTION: This email originated from an External Sender. Please do not click links or open attachments unless you recognize the source.

ATTENTION : Ce courriel provient d'un expéditeur externe. Ne cliquez sur aucun lien et n'ouvrez pas de pièce jointe, excepté si vous connaissez l'expéditeur.

Hi Santhosh,
Please see below correspondence with RVCA indicating that if the pond provides quality control then our site doesn't require on-site quality control.

Can you let me know when you get a moment?

Thanks,

Curtis Melanson, C.E.T.
Practice Area Lead, Land Development
T. 613.714.4621 | **F.** 613.836.3742 | **C.** 613.857.0784
McINTOSH PERRY

From: Eric Lalande <eric.lalande@rvca.ca>
Sent: July 2, 2020 2:19 PM
To: Curtis Melanson <c.melanson@mcintoshperry.com>
Subject: RE: 144 Bentley Avenue

Hi Curtis,

The RVCA requirement is quality protection prior to the outlet into a receiving watercourse. I don't have access to that ponds details at the moment. If you can confirm the pond provides quality protection as required by the RVCA, identify that in the SWM report and we will not require on-site quality control.

I hope this help,

Thanks,

Eric Lalande, MCIP, RPP
Planner, RVCA
613-692-3571 x1137

From: Curtis Melanson <c.melanson@mcintoshperry.com>
Sent: Thursday, July 2, 2020 2:16 PM

To: Eric Lalande <eric.lalande@rvca.ca>
Subject: RE: 144 Bentley Avenue

Thanks for the email Eric, it looks like there is a pond located just to the east at the end of Bentley Avenue. Does this provide quality control in lieu of us providing it on-site?

Thanks,

Curtis Melanson, C.E.T.
Practice Area Lead, Land Development
115 Walgreen Road, R.R. 3, Carp, ON K0A 1L0
T. 613.714.4621 | **F.** 613.836.3742 | **C.** 613.857.0784
c.melanson@mcintoshperry.com | www.mcintoshperry.com
McINTOSH PERRY

Confidentiality Notice – If this email wasn't intended for you, please return or delete it. Click here to read all of the legal language around this concept.

BEST MANAGED COMPANIES CANADA
Platinum member

From: Eric Lalande <eric.lalande@rvca.ca>
Sent: July 2, 2020 2:08 PM
To: Curtis Melanson <c.melanson@mcintoshperry.com>
Subject: RE: 144 Bentley Avenue

Hi Curtis,

The RVCA will require enhanced water quality protection (80% TSS removal).

Thank you,

Eric Lalande, MCIP, RPP
Planner, RVCA
613-692-3571 x1137

From: Curtis Melanson <c.melanson@mcintoshperry.com>
Sent: Thursday, July 2, 2020 11:36 AM

To: Eric Lalande <eric.lalande@rvca.ca>
Subject: 144 Bentley Avenue

Hi Eric,
We just had a pre-consultation with the City regarding the attached site located at 144 Bentley in Nepean. It is a proposed office with warehouse in behind. The back of the site will continue to be for storage with equipment and landscape materials.

The City has asked that we consult with RVCA to confirm any quality control requirements for the project.

Can you please review and let me know if the site requires any onsite quality control?

If you have any questions don't hesitate to let me know.

Thanks,

Curtis Melanson, C.E.T.

Practice Area Lead, Land Development
115 Walgreen Road, R.R. 3, Carp, ON K0A 1L0
T. 613.714.4621 | **F.** 613.836.3742 | **C.** 613.857.0784
c.melanson@mcintoshperry.com | www.mcintoshperry.com

McINTOSH PERRY

Confidentiality Notice – If this email wasn't intended for you, please return or delete it. Click here to read all of the legal language around this concept.

CANADA BEST MANAGED COMPANIES
Platinum member

'

This e-mail originates from the City of Ottawa e-mail system. Any distribution, use or copying of this e-mail or the information it contains by other than the intended recipient(s) is unauthorized. Thank you.

Le présent courriel a été expédié par le système de courriels de la Ville d'Ottawa. Toute distribution, utilisation ou reproduction du courriel ou des renseignements qui s'y trouvent par une personne autre que son destinataire prévu est interdite. Je vous remercie de votre collaboration.

'

APPLICANT'S STUDY AND PLAN IDENTIFICATION LIST

Legend: **S** indicates that the study or plan is required with application submission.
A indicates that the study or plan may be required to satisfy a condition of approval/draft approval.

For information and guidance on preparing required studies and plans refer here:

S/A	Number of copies	ENGINEERING		S/A	Number of copies
S	15	1. Site Servicing Plan	2. Site Servicing Study / Assessment of Adequacy of Public Services	S	3
S	15	3. Grade Control and Drainage Plan	4. Geotechnical Study / Slope Stability Study	S	3
	2	5. Composite Utility Plan	6. Groundwater Impact Study		3
	3	7. Servicing Options Report	8. Wellhead Protection Study		3
	9	9. Transportation Impact Assessment (TIA)	10.Erosion and Sediment Control Plan / Brief	S	3
S	3	11.Storm water Management Report / Brief	12.Hydro geological and Terrain Analysis		3
	3	13.Hydraulic Water main Analysis	14.Noise / Vibration Study	S	3
	PDF only	15.Roadway Modification Functional Design	16.Confederation Line Proximity Study		3

S/A	Number of copies	PLANNING / DESIGN / SURVEY		S/A	Number of copies
	15	17.Draft Plan of Subdivision	18.Plan Showing Layout of Parking Garage		2
	5	19.Draft Plan of Condominium	20.Planning Rationale	S	3
S	15	21.Site Plan	22.Minimum Distance Separation (MDS)		3
	15	23.Concept Plan Showing Proposed Land Uses and Landscaping	24.Agrology and Soil Capability Study		3
	3	25.Concept Plan Showing Ultimate Use of Land	26.Cultural Heritage Impact Statement		3
S	15	27.Landscape Plan	28.Archaeological Resource Assessment Requirements: **S** (site plan) **A** (subdivision, condo)		3
S	2	29.Survey Plan	30.Shadow Analysis		3
S	3	31.Architectural Building Elevation Drawings (dimensioned)	32.Design Brief (includes the Design Review Panel Submission Requirements)	S	Available online
	3	33.Wind Analysis			

S/A	Number of copies	ENVIRONMENTAL		S/A	Number of copies
S	3	34.Phase 1 Environmental Site Assessment	35.Impact Assessment of Adjacent Waste Disposal/Former Landfill Site		3
	3	36.Phase 2 Environmental Site Assessment (depends on the outcome of Phase 1)	37.Assessment of Landform Features		3
	3	38.Record of Site Condition	39.Mineral Resource Impact Assessment		3
S	3	40.Tree Conservation Report	41.Environmental Impact Statement / Impact Assessment of Endangered Species		3
	3	42.Mine Hazard Study / Abandoned Pit or Quarry Study	43.Integrated Environmental Review (Draft, as part of Planning Rationale)		3

S/A	Number of copies	ADDITIONAL REQUIREMENTS		S/A	Number of copies
S	1	44. Applicant's Public Consultation Strategy (may be provided as part of the Planning Rationale)	45.Site Lighting Plan and Certification Letter		3

Meeting Date: July 2, 2020

Application Type: *Site Plan Control - Standard*

File Lead (Assigned Planner): Colette Gorni

Infrastructure Approvals Project Manager: Santhosh Kuruvilla

Site Address (Municipal Address): 144 Bentley Avenue

*Preliminary Assessment: 1☐ 2☐ 3☒ 4☐ 5

*One (1) indicates that considerable major revisions are required before a planning application is submitted, while five (5) suggests that proposal appears to meet the City's key land use policies and guidelines. **This assessment is purely advisory and does not consider technical aspects of the proposal or in any way guarantee application approval.**

Please note that PDF versions of all the listed requirements must be submitted with the application, stored in a USB drive or CD

It is important to note that the need for additional studies and plans may result during application review. If following the submission of your application, it is determined that material that is not identified in this checklist is required to achieve complete application status, in accordance with the Planning Act and Official Plan requirements, the* Planning, Infrastructure and Economic Development Department *will notify you of outstanding material required within the required 30 day period. Mandatory pre-application consultation will not shorten the City's standard processing timelines, or guarantee that an application will be approved. It is intended to help educate and inform the applicant about submission requirements as well as municipal processes, policies, and key issues in advance of submitting a formal development application. This list is valid for one year following the meeting date. If the application is not submitted within this timeframe the applicant must again pre-consult with the Planning, Infrastructure and Economic Development Department.

APPENDIX C
WATERMAIN CALCULATIONS

McINTOSH PERRY

McINTOSH PERRY

CCO-21-0675 - 144 Bentley Avenue - Water Demands

Project:	144 Bentley Avenue
Project No.:	CCO-21-0675
Designed By:	C.D.H
Checked By:	R.P.K.
Date:	November 10, 2020
Site Area:	0.90 gross ha

AVERAGE DAILY DEMAND

DEMAND TYPE	AMOUNT	UNITS
Residential	350	L/c/d
Industrial - Light	35,000	L/gross ha/d
Industrial - Heavy	55,000	L/gross ha/d
Shopping Centres	2,500	L/(1000m² /d
Hospital	900	L/(bed/day)
Schools	70	L/(Student/d)
Trailer Parks no Hook-Ups	340	L/(space/d)
Trailer Park with Hook-Ups	800	L/(space/d)
Campgrounds	225	L/(campsite/d)
Mobile Home Parks	1,000	L/(Space/d)
Motels	150	L/(bed-space/d)
Hotels	225	L/(bed-space/d)
Tourist Commercial	28,000	L/gross ha/d
Othe Commercial	28,000	L/gross ha/d
AVERAGE DAILY DEMAND	0.36	L/s

MAXIMUM DAILY DEMAND

DEMAND TYPE	AMOUNT	UNITS
Residential	2.5 x avg. day	L/c/d
Industrial	1.5 x avg. day	L/gross ha/d
Commercial	1.5 x avg. day	L/gross ha/d
Institutional	1.5 x avg. day	L/gross ha/d
MAXIMUM DAILY DEMAND	0.55	L/s

MAXIMUM HOUR DEMAND

DEMAND TYPE	AMOUNT	UNITS
Residential	2.2 x max. day	L/c/d
Industrial	1.8 x max. day	L/gross ha/d
Commercial	1.8 x max. day	L/gross ha/d
Institutional	1.8 x max. day	L/gross ha/d
MAXIMUM HOUR DEMAND	0.98	L/s

WATER DEMAND DESIGN FLOWS PER UNIT COUNT
CITY OF OTTAWA - WATER DISTRIBUTION GUIDELINES, JULY 2010

McINTOSH PERRY

CCO-21-0675 - 144 Bentley Avenue - OBC Fire Calculations

Project:	144 Bentley Avenue
Project No.:	CCO-21-0675
Designed By:	C.D.H
Checked By:	R.P.K.
Date:	November 10, 2020

Ontario 2006 Building Code Compendium (Div. B - Part 3)

Water Supply for Fire-Fighting - Store/Office & Warhouse Building

Building is classified as Group : D and F3 up to 2 Storeys (from table 3.2.2.55)

Building is of noncombustible construction with fire separations and fire-resistance ratings provided in accordance with subsections 3.2.2., including loadbearing walls, columns and arches

From Div. B A-3.2.5.7. of the Ontario Building Code - 3. Building On-Site Water Supply:

(a) Q = K x V x Stot

where:

Q = minimum supply of water in litres

K = water supply coefficient from Table 1

V = total building volume in cubic metres

Stot = total of spatial coefficient values from the property line exposures on all sides as obtained from the formula:

Stot = 1.0 + [Sside1+Sside2+Sside3+...etc.]

K	12	(from Table 1 pg A-31) (Worst case occupancy {F3} 'K' value used)
V	8,105	(Total building volume in m³.)
Stot	1.0	(From figure 1 pg A-32)
Q =	97,261.01 L	

			From Figure 1 (A-32)
Snorth	70	m	0.0
Seast	26	m	0.0
Ssouth	110	m	0.0
Swest	42	m	0.0

*approximate distances

From Table 2: Required Minimum Water Supply Flow Rate (L/s)

2700 L/min (if Q <108,000 L)
713 gpm

McINTOSH PERRY

CCO-21-0675 - 144 Bentley Avenue - Fire Underwriters Survey (FUS) Fire Calculations

Project:	144 Bentley Avenue
Project No.:	CCO-21-0675
Designed By:	C.D.H
Checked By:	R.P.K.
Date:	November 10, 2020

From the Fire Underwriters Survey (1999)

From Part II – Guide for Determination of Required Fire Flow Copyright I.S.O.:

F = 220 x C x √A Where:

F = Required fire flow in liters per minute

C = Coefficient related to the type of construction.

A = The total floor area in square meters (including all storey's, but excluding basements at least 50 percent below grade) in the building being considered.

A. Determine The Coefficient Related To The Type Of Construction

The building is considered to be of ordinary construction type. Therefore,

C = 1.00

B. Determine Ground Floor Area

As provided by the Architect:

Total Floor Area = 1,113.48 m²

A = 1,113.48 m²

This floor area represents the final build-out of the development; as outlined on the Site Plan drawing.

C. Determine Height in Storeys

From Architectural Drawings:

Number of Storeys = 1.00

D. Calculate Required Fire Flow

F = 220 x C x √A

F = 220.00 X 1.00 X √ 1113.48

F = 7,341.15 L/min.

E. Determine Increase or Decrease Based on Occupancy

From note 2, Page 18 of the Fire Underwriter Survey:

Low Hazard - Hotel

No Change

Occupancy Decrease = 0.00 L/min.

F = 7,341.15 L/min.

F. Determine the Decrease, if any for Sprinkler Protection

From note 3, Page 18 of the Fire Underwriter Survey:

- The flow requirement may be reduced by up to 50% for complete automatic sprinkler protection depending upon adequacy of the system.
- The credit for the system will be a maximum of 30% for an adequately designed system conforming to NFPA 13 and other NFPA sprinkler standards.
- Additional credit of 10% if water supply is standard for both the system and fire department hose lines
- If sprinkler system is fully supervised system, an additional 10% credit is granted
- The entire building will be installed with a fully automated, standardized with the City of Ottawa Fire Department and fully supervised.
- Therefore the value obtained in Step E is reduced by 30% (The building is sprinklered with a standard system and fire department hose lines)

Reduction	=	7,341.15 L/min.	X	0%
Reduction	=	0.00 L/min.		

G. Determine the Total Increase for Exposures

From note 4, Page 18 of the Fire Underwriter Survey:

- Exposure distance to the existing buildings to the north & south of the proposed building is approximately 32m respectfully.
- There are no existing buildings surrounding the remainder of the site that are within 45m.
- Therefore the charge for exposure is 5% of the value obtained in Step E.

Increase	=	7,341.15 L/min.	X	5%
Increase	=	367.06 L/min.		

H. Determine the Total Fire Demand

- To the answer obtained in E, substract the value obtained in F and add the value obtained in G
- Fire flow should be no less than 2,000L/min. and the maximum value shoul not exceed 45,000L/min.

F	=	7,341.15 L/min.	-	0.00	L/min.	+	367.06	L/min.
F	=	7,708.21 L/min.						

Therefore, after rounding to the nearest 1,000 L/min, the total required fire flow for the development is 8,000 L/min (5,283 GPM).

From:	Valic, Jessica <jessica.valic@ottawa.ca>
Sent:	November 9, 2020 2:14 PM
To:	Curtis Melanson
Subject:	RE: 144 Bentley - Water Boundary Conditions
Attachments:	144 Bentley November 2020.pdf
Follow Up Flag:	Follow up
Flag Status:	Flagged

Hi Curtis,

As requested, here are the boundary conditions for 144 Bentley.

The following are boundary conditions, HGL, for hydraulic analysis at 144 Bentley (zone 2W2C). The boundary conditions are at the connection to the 305mm on Bentley Avenue (see attached PDF for location).

Minimum HGL = 124.9m

Maximum HGL = 132.9m

MaxDay + Fire Flow (183.3 L/s) = 114.2m

These are for current conditions and are based on computer model simulation.

Disclaimer: The boundary condition information is based on current operation of the city water distribution system. The computer model simulation is based on the best information available at the time. The operation of the water distribution system can change on a regular basis, resulting in a variation in boundary conditions. The physical properties of watermains deteriorate over time, as such must be assumed in the absence of actual field test data. The variation in physical watermain properties can therefore alter the results of the computer model simulation.

Please do not hesitate to contact me with any questions/concerns.

Regards,

Jessica Valic, E.I.T.
Project Manager
Planning, Infrastructure and Economic Development Department - Services de la planification, de l'infrastructure et du développement économique
Development Review - West
City of Ottawa | Ville d'Ottawa
110 Laurier Avenue West Ottawa, ON | 110, avenue. Laurier Ouest. Ottawa (Ontario) K1P 1J1
613.580.2424 ext./poste 15672
jessica.valic@ottawa.ca

****Please note that due to the current situation, I am working remotely. Email is currently the best way to contact me****

From: Curtis Melanson <c.melanson@mcintoshperry.com>
Sent: November 04, 2020 8:34 AM
To: Valic, Jessica <jessica.valic@ottawa.ca>
Subject: 144 Bentley - Water Boundary Conditions

CAUTION: This email originated from an External Sender. Please do not click links or open attachments unless you recognize the source.

ATTENTION : Ce courriel provient d'un expéditeur externe. Ne cliquez sur aucun lien et n'ouvrez pas de pièce jointe, excepté si vous connaissez l'expéditeur.

Hi Jessica,
Please see attached and below table regarding the water flows for 144 Bentley.

Let me know if you need anything else.

Site Area	0.9 ha
Industrial - Light	35,000 L/ha/day
Average Day Demand (L/s)	0.36
Maximum Daily Demand (L/s)	0.55
Peak Hourly Demand (L/s)	0.98
OBC Fire Flow Requirement (L/s)	45.00
FUS Fire Flow Requirement (L/s)	133.33
Max Day + Fire Flow (FUS) (L/s)	133.88

Thanks,

Curtis Melanson, C.E.T.
Practice Area Lead, Land Development
115 Walgreen Road, R.R. 3, Carp, ON K0A 1L0
T. 613.714.4621 | **F.** 613.836.3742 | **C.** 613.857.0784
c.melanson@mcintoshperry.com | www.mcintoshperry.com

McINTOSH PERRY

Confidentiality Notice – If this email wasn't intended for you, please return or delete it. Click here to read all of the legal language around this concept.

We have been informed that a number of our clients have received phishing emails from scammers pretending to be McIntosh Perry. We take information security very seriously and ask that you also be vigilant in order to prevent fraud. If you have any concerns, please let your contact at McIntosh Perry know or email us at info@mcintoshperry.com

CANADA BEST MANAGED COMPANIES Platinum member

'

This e-mail originates from the City of Ottawa e-mail system. Any distribution, use or copying of this e-mail or the information it contains by other than the intended recipient(s) is unauthorized. Thank you.

Le présent courriel a été expédié par le système de courriels de la Ville d'Ottawa. Toute distribution, utilisation ou reproduction du courriel ou des renseignements qui s'y trouvent par une personne autre que son destinataire prévu est interdite. Je vous remercie de votre collaboration.

'

Boundary Conditons for 144 Bentley Avenue

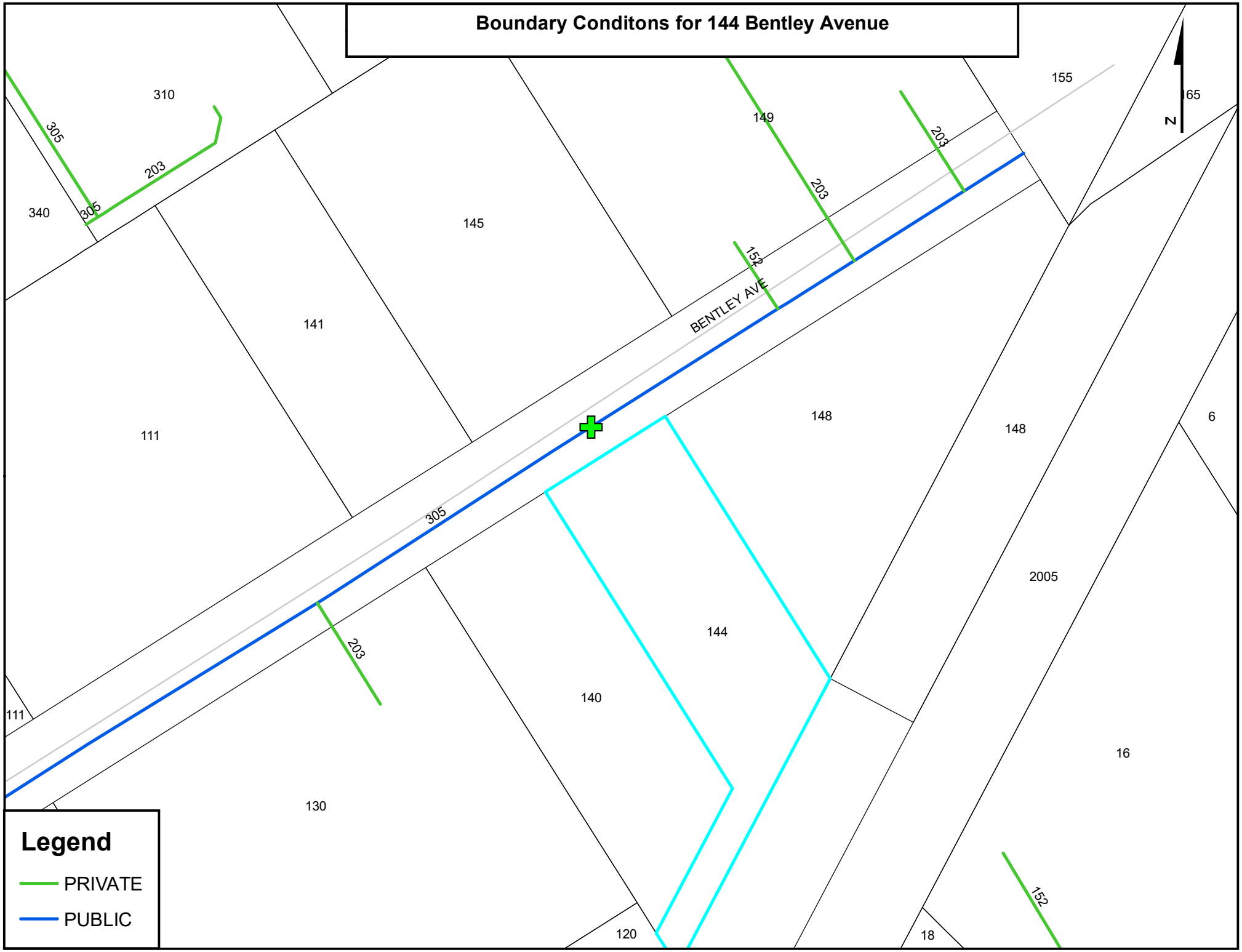

Active Scenario: Max Day + Fire Flow

Label	Is Fire Flow Run Balanced?	Satisfies Fire Flow Constraints?	Fire Flow (Needed) (L/min)	Fire Flow (Available) (L/min)	Pressure (psi)	Elevation (m)	Demand (L/min)	Pressure (Residual Lower Limit) (psi)	Pressure (Calculated System Lower Limit) (psi)
H-1	True	True	8,000.00	15,043.14	40.09	85.96	0.00	20.00	39.27
J-1 (BLDG)	False	False	8,000.00	(N/A)	39.27	86.53	32.81	20.00	(N/A)

Active Scenario: Average Day

Label	Elevation (m)	Demand (L/min)	Pressure (psi)	Hydraulic Grade (m)
J-1 (BLDG)	86.53	21.88	65.82	132.90

Active Scenario: Peak Hourly

Label	Elevation (m)	Demand (L/min)	Pressure (psi)	Hydraulic Grade (m)
J-1 (BLDG)	86.53	59.06	54.46	124.90

APPENDIX D
SANITARY SEWER CALCULATIONS

McINTOSH PERRY

SANITARY SEWER DESIGN SHEET

PROJECT: 144 Bentley Avenue
LOCATION: City of Ottawa
CLIENT: CityScape

McINTOSH PERRY

LOCATION				RESIDENTIAL									ICI AREAS							INFILTRATION ALLOWANCE			FLOW	SEWER DATA						
1	2	3	4	5	6	7	8	9	10	11	12	13	14	15	16	17	18	19	20	21	22	23	24	25	26	27	28	29	30	31
				UNIT TYPES				AREA	POPULATION			PEAK	AREA (ha)						PEAK	AREA (ha)		FLOW	DESIGN	CAPACITY	LENGTH	DIA	SLOPE	VELOCITY	AVAILABLE CAPACITY	
													INSTITUTIONAL		COMMERCIAL		INDUSTRIAL													
STREET	AREA ID	FROM MH	TO MH	SF	SD	TH	APT	(ha)	IND	CUM	PEAK FACTOR	FLOW (L/s)	IND	CUM	IND	CUM	IND	CUM	FLOW (L/s)	IND	CUM	(L/s)	FLOW (L/s)	(L/s)	(m)	(mm)	(%)	(full) (m/s)	L/s	(%)
	B1-B7	BLD	MH2A						0.0	0.0	4.00	0.00		0.00		0.00	0.90	0.90	2.48	0.90	0.90	0.30	2.78	22.47	13.20	150	2.00	1.232	19.69	87.64
		MH2A	MH1A						0.0	0.0	4.00	0.00		0.00		0.00	0.90	0.90	2.48	0.90	0.90	0.30	2.78	22.47	41.95	150	2.00	1.232	19.69	87.64
		MH1A	Ex 675mm						0.0	0.0	4.00	0.00		0.00		0.00	0.90	0.90	2.48	0.90	0.90	0.30	2.78	22.47	22.05	150	2.00	1.232	19.69	87.64

Design Parameters:

Residential			ICI Areas			Peak Factor
SF	3.4	p/p/u				
TH/SD	2.7	p/p/u	INST	28,000	L/Ha/day	1.5
APT	2.3	p/p/u	COM	28,000	L/Ha/day	1.5
Other	60	p/p/Ha	IND	35,000	L/Ha/day	MOE Chart
					Light Industrial:	6.8

Notes:
1. Mannings coefficient (n) = 0.013
2. Demand (per capita): 280 L/day
3. Infiltration allowance: 0.33 L/s/Ha
4. Residential Peaking Factor:
Harmon Formula = 1+(14/(4+P^0.5)*0.8)
where P = population in thousands

Designed: CJM

Checked: RPK

Project No.: CCO-21-0675

No.	Revision	Date
1.	Issued for Review	2020-08-12
2.	Revised Site Plan	2020-10-30
3.	Revised per City Comments	2020-11-06

Sheet No:
1 of 1

APPENDIX E
PRE-DEVELOPMENT DRAINAGE PLAN

McINTOSH PERRY

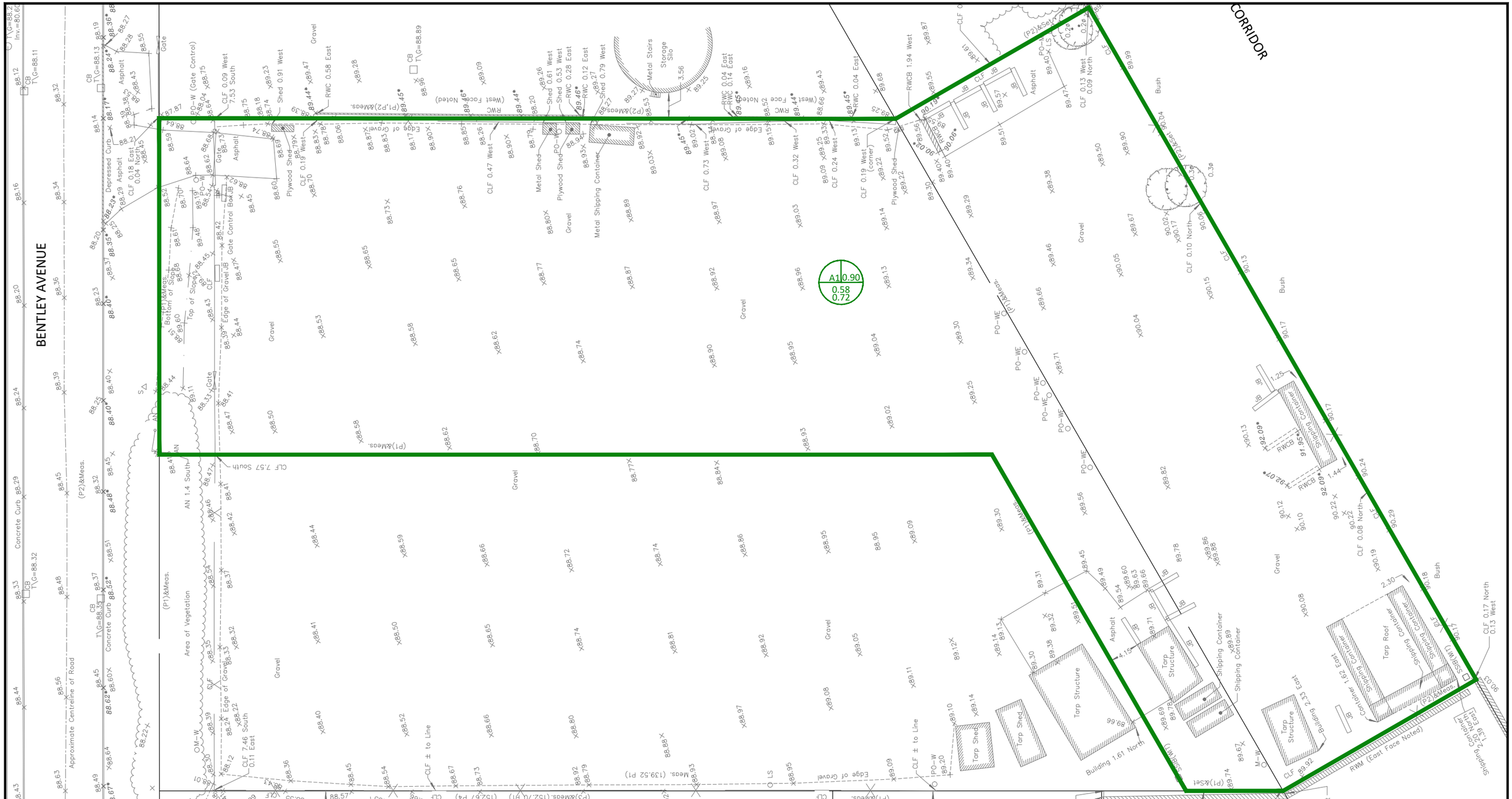

SCALE 1 : 500

0 10 20 30 40 50 Metres

LEGEND

AREA I.D. — AREA (ha)

B5 | 0.54

0.61

0.75

RUNOFF COEFFICIENT

5-YEAR

100-YEAR

McINTOSH PERRY

115 Walgreen Road, RR3, Carp, ON K0A 1L0

Tel: 613-836-2184 Fax: 613-836-3742

www.mcintoshperry.com

Client: CITYSCAPE DIV A. GROUP INC.
P.O. BOX 6937, STATION J K2A 3Z5

Project: CITYSCAPE COMMERCIAL WAREHOUSE
144 BENTLEY AVENUE

Drawing Title: PRE-DEVELOPMENT DRAINAGE AREA PLAN

Drawn by:	Checked By:
P.G.K.	R.P.K.
Scale: 1:500	Project Number: CCO-21-0675

No.	Revisions	Date
1	ISSUED FOR SITE PLAN CONTROL	AUG. 12, 2020

Drawing Number: PRE

FILENAME: C:\Users\p.kirkimzis\OneDrive - McIntosh Perry\CCO-21-0675 CityScape_SPC_144 Bentley Road\12 - Drawings\CCO-21-0675_Presentation.dwg
LAST SAVED: Wednesday, August 12, 2020 LAST SAVED BY: p.kirkimzis
LAST PLOTTED: Wednesday, August 12, 2020 CTB FILE: ESDC-

APPENDIX F
POST-DEVELOPMENT DRAINAGE PLAN

McINTOSH PERRY

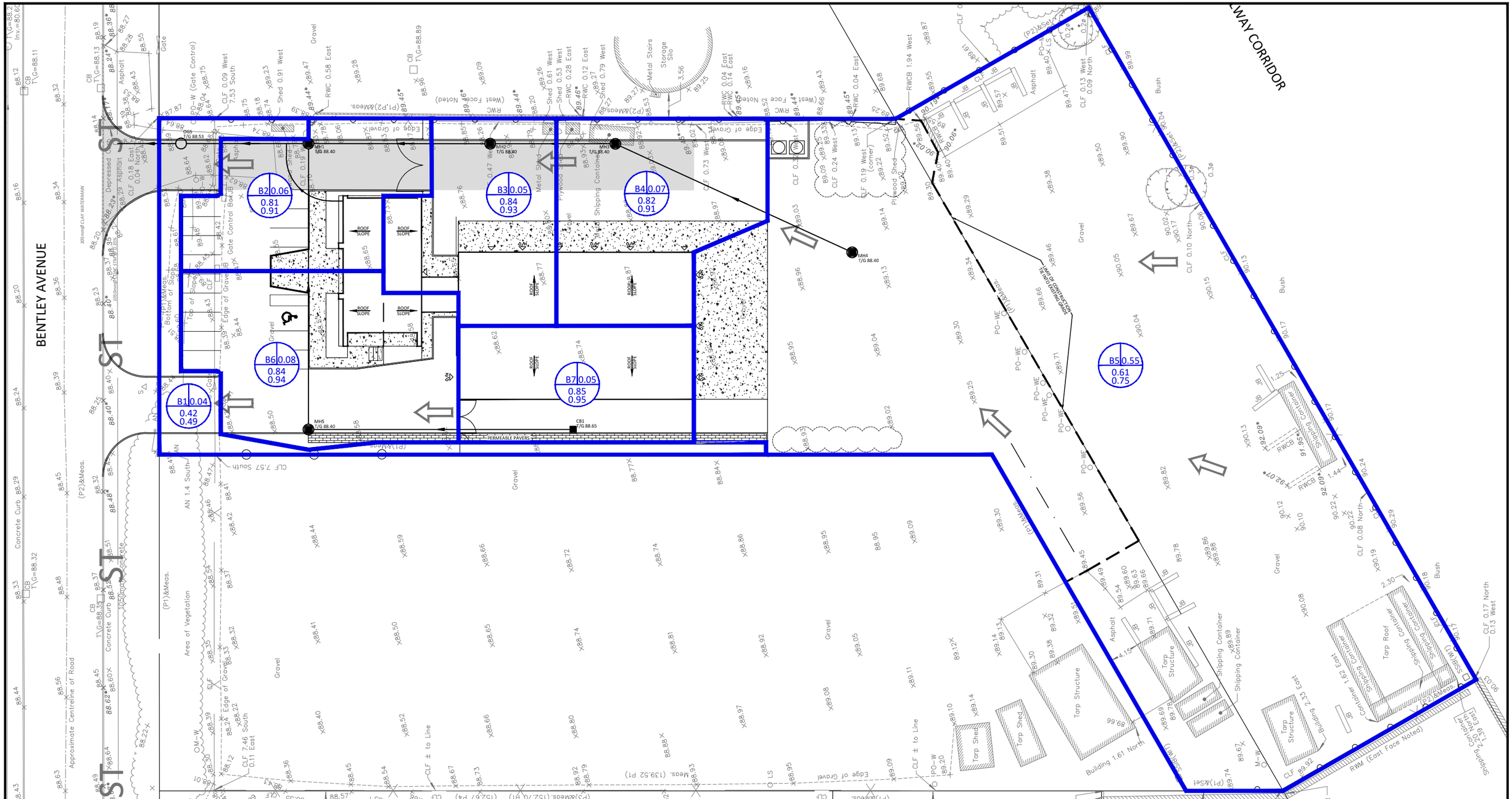

LEGEND

AREA I.D. — AREA (ha)

B5 0.54
0.61
0.75

RUNOFF COEFFICIENT
5-YEAR
100-YEAR

SCALE 1 : 500

0 10 20 30 40 50 Metres

McINTOSH PERRY
115 Walgreen Road, RR3, Carp, ON K0A 1L0
Tel: 613-836-2184 Fax: 613-836-3742
www.mcintoshperry.com

Client:
CITYSCAPE DIV A. GROUP INC.
P.O. BOX 6937, STATION J K2A 3Z5

Project:
CITYSCAPE COMMERCIAL WAREHOUSE
144 BENTLEY AVENUE

Drawing Title:
POST-DEVELOPMENT DRAINAGE AREA PLAN

Drawn by:	Checked By:
P.G.K.	R.P.K.
Scale: 1:500	Project Number: CCO-21-0675

No.	Revisions	Date
3	REVISED PER CITY COMMENTS	NOV. 6, 2020
2	REVISED SITE PLAN	OCT. 30, 2020
1	ISSUED FOR SITE PLAN CONTROL	AUG. 12, 2020

Drawing Number: POST

FILENAME:U:\Ottawa\01 Project - Proposals\2021 Jobs\CCO\CCO-21-0675 CityScape_SPC_144 Bentley Road\Civil\12 - Drawings\CCO-21-0675_Presentation.dwg
LAST SAVED: Friday, November 06, 2020 LAST SAVED BY: pKlimtzis
LAST PLOTTED: Monday, November 09, 2020 CTB FILE USED:

APPENDIX G
STORMWATER MANAGEMENT CALCULATIONS

McINTOSH PERRY

Pre-Development Runoff Coefficient

Drainage Area	Area (ha)	Impervious Area (m^2)	C	Gravel Area (m^2)	C	Pervious Area (m^2)	C	C_{AVG} 2&5-Year	C_{AVG} 100-Year
A1	0.90	401.95	0.90	7,867.48	0.60	697.32	0.20	0.58	0.72

Pre-Development Runoff Calculations

Drainage Area	Area (ha)	C 2&5-Year	C 100-Year	Tc (min)	I (mm/hr)			Q (L/s)		
					2-Year	5-Year	100-Year	2-Year	5-Year	100-Year
A1	0.90	0.58	0.72	10	76.8	104.2	178.6	111.49	151.25	321.51
Total	0.90							111.49	151.25	321.51

Post-Development Runoff Coefficient

Drainage Area	Area (ha)	Impervious Area (m^2)	C	Gravel Area (m^2)	C	Pervious Area (m^2)	C	C_{AVG} 2&5-Year	C_{AVG} 100-Year
B1	0.04	125.63	0.90	0.00	0.60	270.97	0.20	0.42	0.49
B2	0.06	482.03	0.90	0.00	0.60	67.97	0.20	0.81	0.91
B3	0.05	500.39	0.90	0.00	0.60	47.66	0.20	0.84	0.93
B4	0.07	605.60	0.90	0.00	0.60	79.75	0.20	0.82	0.91
B5	0.55	573.50	0.90	4,619.27	0.60	288.01	0.20	0.61	0.75
B6	0.08	730.99	0.90	0.00	0.60	68.29	0.20	0.84	0.94
B7	0.05	470.58	0.90	0.00	0.60	36.80	0.20	0.85	0.95

Post-Development Runoff Calculations

Drainage Area	Area (ha)	C 2&5-Year	C 100-Year	Tc (min)	I (mm/hr)			Q (L/s)		
					2-Year	5-Year	100-Year	2-Year	5-Year	100-Year
B1	0.04	0.42	0.49	10	76.8	104.2	178.6	3.57	4.84	9.60
B2	0.06	0.81	0.91	10	76.8	104.2	178.6	9.55	12.96	24.77
B3	0.05	0.84	0.93	10	76.8	104.2	178.6	9.82	13.32	25.43
B4	0.07	0.82	0.91	10	76.8	104.2	178.6	11.98	16.25	31.05
B5	0.55	0.61	0.75	10	76.8	104.2	178.6	71.43	96.90	204.02
B6	0.08	0.84	0.94	10	76.8	104.2	178.6	14.34	19.45	37.13
B7	0.05	0.85	0.95	10	76.8	104.2	178.6	9.20	12.48	23.82
Total	0.90							129.89	176.21	355.82

Required Restricted Flow

Drainage Area	Area (ha)	C 2&5-Year	Tc (min)	I (mm/hr)	Q (L/s)
				5-Year	5-Year
A1	0.90	0.50	10	104.2	129.86

100-year restricted flow to match 5-year pre-development flow at a C = 0.50

Post-Development Restricted Runoff Calculations

Drainage Area	Unrestricted Flow (L/s)			Restricted Flow (L/s)		
	2-Year	5-Year	100-Year	2-Year	5-Year	100-Year
B1	3.57	4.84	9.60	3.57	4.84	9.60
B2	9.55	12.96	24.77	90.15	116.30	120.27
B3	9.82	13.32	25.43			
B4	11.98	16.25	31.05			
B5	71.43	96.90	204.02			
B6	14.34	19.45	37.13			
B7	9.20	12.48	23.82			
Total	129.89	176.21	355.82	93.72	121.14	129.86

Storage Requirements

2-Year Storm Event

Tc (min)	I (mm/hr)	B2 Runoff (L/s)	B3 Runoff (L/s)	B4 Runoff (L/s)	B5 Runoff (L/s)	B6 Runoff (L/s)	B7 Runoff (L/s)	Allowable Outflow (L/s)	Runoff to be Stored (L/s)	Storage Required (m^3)
3	121.5	15.11	15.53	18.94	112.96	22.68	14.55	90.15	109.62	19.73
4	111.7	13.90	14.28	17.42	103.90	20.86	13.38	90.15	93.60	22.46
5	103.6	12.88	13.24	16.15	96.32	19.34	12.41	90.15	80.19	24.06
6	96.6	12.02	12.36	15.07	89.87	18.04	11.58	90.15	68.79	24.76
7	90.7	11.28	11.59	14.14	84.32	16.93	10.86	90.15	58.96	24.76
8	85.5	10.63	10.93	13.33	79.47	15.95	10.24	90.15	50.40	24.19
9	80.9	10.06	10.34	12.61	75.21	15.10	9.69	90.15	42.86	23.14

Maximum Storage Required 2-Year (m^3) =	24.76

5-Year Storm Event

Tc (min)	I (mm/hr)	B2 Runoff (L/s)	B3 Runoff (L/s)	B4 Runoff (L/s)	B5 Runoff (L/s)	B6 Runoff (L/s)	B7 Runoff (L/s)	Allowable Outflow (L/s)	Runoff to be Stored (L/s)	Storage Required (m^3)
4	152.5	18.97	19.50	23.78	141.83	28.47	18.27	116.30	134.52	32.29
5	141.2	17.56	18.05	22.02	131.30	26.36	16.91	116.30	115.89	34.77
6	131.6	16.36	16.82	20.52	122.36	24.56	15.76	116.30	100.08	36.03
7	123.3	15.34	15.76	19.23	114.67	23.02	14.77	116.30	86.49	36.33
8	116.1	14.44	14.84	18.11	107.98	21.68	13.91	116.30	74.66	35.84
9	109.8	13.66	14.04	17.12	102.11	20.50	13.15	116.30	64.27	34.71
10	104.2	12.96	13.32	16.25	96.90	19.45	12.48	116.30	55.06	33.04

Maximum Storage Required 5-Year (m^3) =	36.33

100-Year Storm Event

Tc (min)	I (mm/hr)	B2 Runoff (L/s)	B3 Runoff (L/s)	B4 Runoff (L/s)	B5 Runoff (L/s)	B6 Runoff (L/s)	B7 Runoff (L/s)	Allowable Outflow (L/s)	Runoff to be Stored (L/s)	Storage Required (m^3)
11	169.9	23.57	24.20	29.55	194.13	35.33	22.66	120.27	209.18	138.06
12	162.1	22.49	23.09	28.19	185.25	33.72	21.63	120.27	194.10	139.75
13	155.1	21.52	22.09	26.97	177.22	32.26	20.69	120.27	180.48	140.77
14	148.7	20.63	21.18	25.86	169.93	30.93	19.84	120.27	168.10	141.21
15	142.9	19.82	20.35	24.85	163.27	29.72	19.06	120.27	156.80	141.12
16	137.5	19.08	19.59	23.92	157.16	28.60	18.35	120.27	146.44	140.58
17	132.6	18.40	18.89	23.06	151.54	27.58	17.69	120.27	136.90	139.63

Maximum Storage Required 100-Year (m^3) =	141.21

Storage Provided

2-Year Storm Event

Structure/Pipe	Size (mm)	Depth/ Length (m)	Area (m^2)	Volume (m^3)
MH1	1200	2.49	1.13	2.82
MH1-MH2	450	24.70	0.16	3.93
MH2	1200	2.36	1.13	2.67
MH2-MH3	450	17.00	0.16	2.70
MH3	1200	2.32	1.13	2.62
MH3-MH4	450	35.40	0.16	5.63
MH4	1200	2.22	1.13	2.51
MH1-MH5	250	38.85	0.05	1.91
MH5	1200	2.04	1.13	2.31
MH5-CB1	200	35.55	0.03	1.12
CB1	600x600	1.99	0.37	0.74

Maximum Storage Provided (m^3) = 28.95

5-Year Storm Event

Water Elevation (m) =		88.59	OUTLET INVERT (m)	Area (m^2)	Depth (m)	Head (m)	Volume (m^3)
Structure	T/G (m)	Pipe dia. (mm)					
MH1	88.40	450	86.21	114.75	0.19	2.16	9.38
MH2	88.40	450	86.34	79.21	0.19	2.03	5.24
MH3	88.40	450	86.38	70.19	0.19	1.99	4.60
MH4	88.40	450	86.48	154.98	0.19	1.89	9.82
MH5	88.40	250	86.66	114.35	0.19	1.81	7.30
CB1	88.65	200	87.26	-	-	-	-

Maximum Storage Provided (m^3) = 36.34

100-Year Storm Event

Water Elevation (m) =		88.70	OUTLET INVERT (m)	Area (m^2)	Depth (m)	Head (m)	Volume (m^3)
Structure	T/G (m)	Pipe dia. (mm)					
MH1	88.40	450	86.21	259.29	0.30	2.27	32.43
MH2	88.40	450	86.34	156.47	0.30	2.14	19.30
MH3	88.40	450	86.38	183.06	0.30	2.10	19.15
MH4	88.40	450	86.48	386.37	0.30	2.00	39.81
MH5	88.40	250	86.66	288.28	0.30	1.92	30.04
CB1	88.65	200	87.26	11.74	0.05	1.34	0.60

Maximum Storage Provided (m^3) = 141.33

Inlet Control Device Curve

John Meunier - Hydrovex VHV ICD Curves

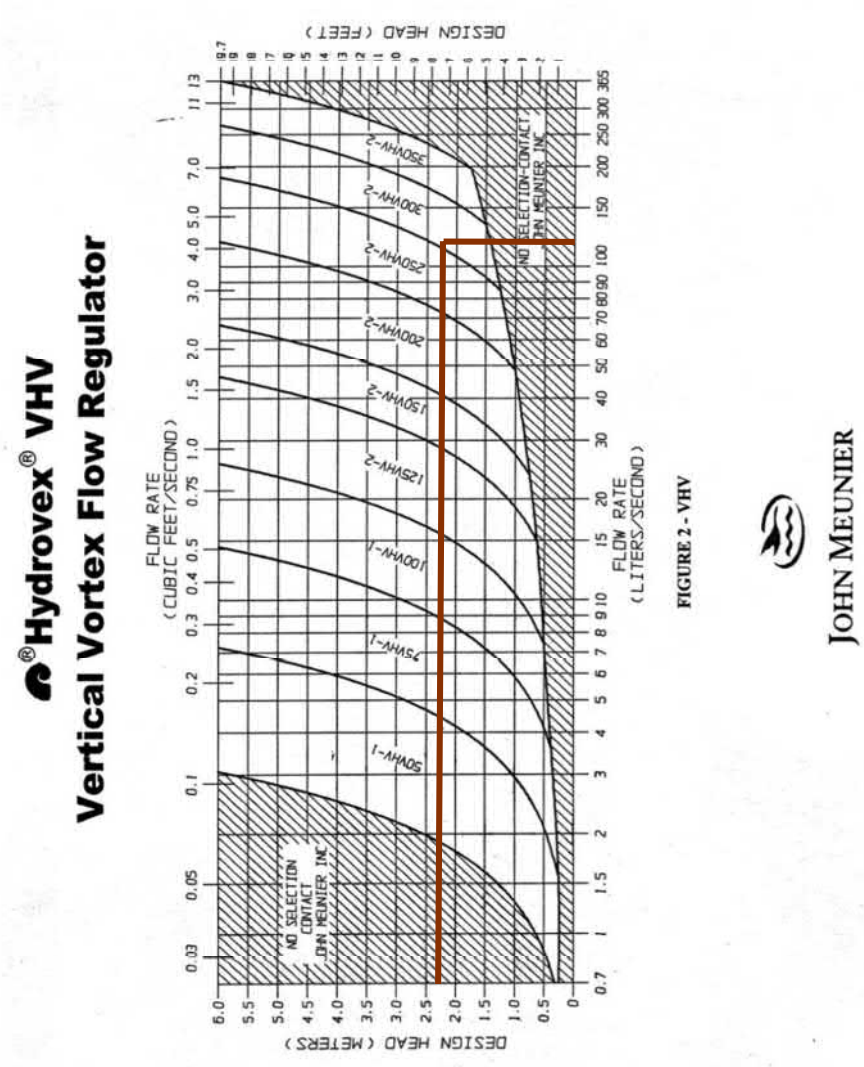

FIGURE 2 - VHV

115 Walgreen Road, R.R.3. Carp, ON K0A 1L0 | T. 613-836-2184 | F. 613-836-3742
info@mcintoshperry.com | www.mcintoshperry.com

STORM SEWER DESIGN SHEET

McINTOSH PERRY

PROJECT: 144 Bentley Road
LOCATION: Ottawa, ON
CLIENT: Cityscape Div A. Group Inc.

LOCATION				CONTRIBUTING AREA (ha)								RATIONAL DESIGN FLOW											SEWER DATA								
1	2	3	4	5	6	7	8	9	10	11	12	13	14	15	16	17	18	19	20	21	22	23	24	25	26	27	28	29	30	31	32
STREET	AREA ID	FROM MH	TO MH	C-VALUE 0.61	0.81	0.82	0.84	0.85	0.90	INDIV AC	CUMUL AC	INLET (min)	TIME IN PIPE	TOTAL (min)	i (5) (mm/hr)	i (10) (mm/hr)	i (100) (mm/hr)	5yr PEAK FLOW (L/s)	10yr PEAK FLOW (L/s)	100yr PEAK FLOW (L/s)	FIXED FLOW (L/s)	DESIGN FLOW (L/s)	CAPACITY (L/s)	LENGTH (m)	PIPE SIZE (mm) DIA	W	H	SLOPE (%)	VELOCITY (m/s)	AVAIL CAP (5yr) (L/s)	(%)
	B5	MH4	MH3	0.55						0.34	0.34	10.00	0.73	10.73	104.19	122.14	178.56	97.18				97.18	133.02	35.40	450			0.20	0.810	35.84	26.94%
	B4	MH3	MH2			0.07				0.06	0.39	10.73	0.35	11.08	100.50	117.79	172.17	109.77				109.77	133.02	17.00	450			0.20	0.810	23.25	17.48%
	B3	MH2	MH1				0.05			0.04	0.43	11.08	0.51	11.59	98.82	115.82	169.27	119.48				119.48	133.02	24.70	450			0.20	0.810	13.54	10.18%
	B7	CB1	MH5					0.05		0.04	0.04	10.00	0.45	10.45	104.19	122.14	178.56	12.31				12.31	42.60	35.55	200			1.55	1.314	30.29	71.10%
	B6	MH5	MH1				0.08			0.07	0.11	10.45	0.79	11.24	101.87	119.40	174.54	31.07				31.07	41.62	38.85	250			0.45	0.821	10.55	25.35%
	B2	MH1	OGS		0.06					0.00	0.54	11.59	0.32	11.91	96.50	113.08	165.25	146.10				146.10	200.65	17.30	525			0.20	0.898	54.54	27.18%
		OGS	OUTLET							0.00	0.54	11.91	0.16	12.07	95.09	111.43	162.82	143.97				143.97	200.65	8.65	525			0.20	0.898	56.67	28.25%

Definitions:
Q = 2.78CiA, where:
Q = Peak Flow in Litres per Second (L/s)
A = Area in Hectares (ha)
i = Rainfall intensity in millimeters per hour (mm/hr)
[i = 998.071 / (TC+6.053)^0.814] 5 YEAR
[i = 1174.184 / (TC+6.014)^0.816] 10 YEAR
[i = 1735.688 / (TC+6.014)^0.820] 100 YEAR

Notes:
1. Mannings coefficient (n) = 0.013

Designed: P.G.K.
Checked: R.P.K.
Project No.: CCO-21-0675

No.	Revision	Date
1.	Issued for Site Plan Control	Aug. 12, 2020
2.	Revised Site Plan	Oct. 30, 2020
3.	Revised per City Comments	Nov. 6, 2020

Sheet No: 1 of 1

APPENDIX H
HYDRO INTERNATIONAL FIRST DEFENSE UNIT

McINTOSH PERRY

Curtis Melanson

From: Curtis Melanson
Sent: November 11, 2020 1:19 PM
To: Curtis Melanson
Subject: FW: 144 Bentley Avenue - Ottawa

Curtis Melanson, C.E.T.
Practice Area Lead, Land Development
T. 613.714.4621 | **F.** 613.836.3742 | **C.** 613.857.0784
McINTOSH PERRY

From: Kevin Cowden <Kcowden@hydro-int.com>
Sent: November 5, 2020 9:42 AM
To: Curtis Melanson <c.melanson@mcintoshperry.com>
Subject: 144 Bentley Avenue - Ottawa

Hey Curtis,

I've shown the 1200mm FDHC as your best option.

Hydro First Defense® - HC

Net Annual Water Quality Worksheet

Rev. 9.8

Project Name:	144 Bentley Avenue	Report Date:	11/5/2020
Street:	144 Bentley Avenue	City:	Ottawa
Province:	Ontario	Country:	
Designer:		email:	

Paste

Treatment Parameters:

Structure ID:		
TSS Goal:	80	% Removal
TSS Particle Size:	Fine	
Area:	0.9	ha
Percent Impervious:	0%	
Rational C value:	0.68	Calc. Cn
Rainfall Station:	Ottawa, ONT	MAP
Peak Storm Flow:	416	L/s

RESULTS SUMMARY

Model	TSS	Volume
FD-3HC	83.5%	98.3%
FD-4HC	**88.1%**	**99.7%**
FD-5HC	91.7%	100.0%
FD-6HC	93.6%	99.9%
FD-8HC	96.2%	99.9%

Model Specification:

Model:	FD-4HC	
Diameter:	1200	mm
Peak Flow Capacity:	510.00	L/s
Sediment Storage:	0.54	m^3
Oil Storage:	723.00	L

Installation Configuration:

Placement:	Online		
Outlet Pipe Size:		mm	OK
Inlet Pipe 1 Size:		m	OK
Inlet Pipe 2 Size:		mm	OK

Net Annual Removal Model:

Intensity[1] (mm/hr)	Fraction of Rainfall[1] (%)	FD-4HC Removal Efficiency (%)
0.50	0.1%	100.0%
1.00	14.1%	99.0%
1.50	14.2%	95.3%
2.00	14.1%	92.8%
2.50	4.2%	90.9%
3.00	1.5%	89.4%
3.50	8.5%	88.1%
4.00	5.4%	87.0%
4.50	1.2%	86.1%
5.00	5.5%	85.2%
6.00	4.3%	83.8%
7.00	4.5%	82.6%
8.00	3.1%	81.6%
9.00	2.3%	80.7%
10.00	2.6%	79.9%
20.00	9.2%	74.9%
30.00	2.6%	72.1%
40.00	1.2%	70.2%
50.00	0.5%	68.8%
100.00	0.7%	64.5%
150.00	0.1%	62.1%
200.00	0.0%	60.5%
Total Net Annual Removal Efficien		
Total Annual Runoff Volume Treat		

Kindest regards,

Kevin Cowden

Kevin Cowden
Regional Sales Manager
(416) 885-3804
kcowden@hydro-int.com

Hydro International®
Stormwater Solutions
www.hydro-int.com

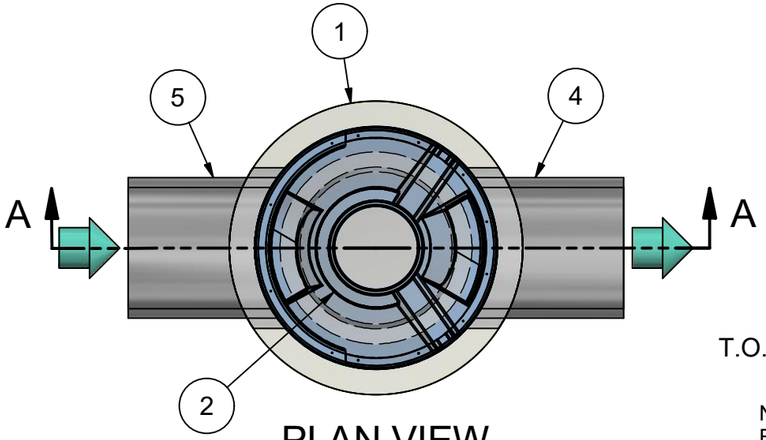

PLAN VIEW

HYDRO FRAME AND COVER (INCLUDED)

GRADE RINGS BY OTHERS AS REQUIRED

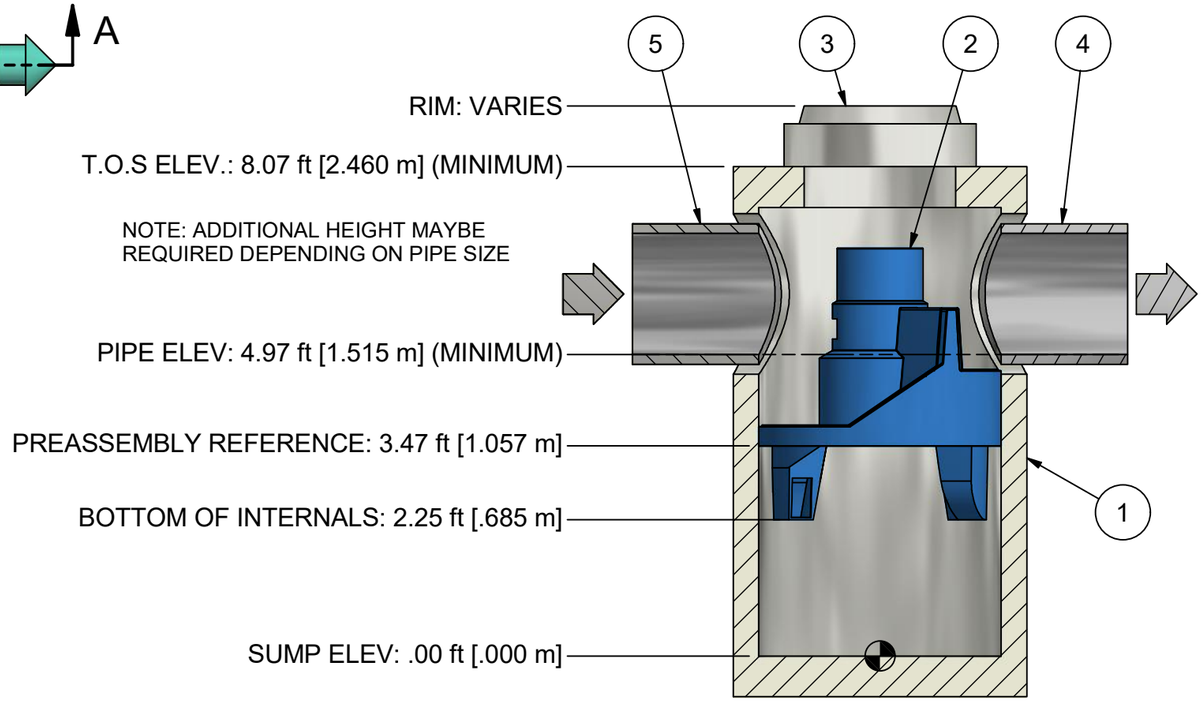

SECTION A-A

PRODUCT SPECIFICATION:

1. PEAK HYDRAULIC FLOW: 18.0 cfs (510 l/s)
2. MIN SEDIMENT STORAGE CAPACITY: 0.7 cu. yd. (0.5 cu. m.)
3. OIL STORAGE CAPACITY: 191 gal. (723 liters)
4. MAXIMUM INLET/OUTLET PIPE DIAMETERS: 24 in. (600 mm)
5. THE TREATMENT SYSTEM SHALL USE AN INDUCED VORTEX TO SEPARATE POLLUTANTS FROM STORMWATER RUNOFF.
6. NJCAT VERIFIED FOR GREATER THAN 85% TSS AT 1.88 cfs (53.2 l/s) FOR OK 110 (50-150 MICRONS)
7. NJCAT VERIFIED FOR GREATER THAN 90% TSS AT 1.5 cfs (42.5 l/s) FOR DOWN TO 50 MICRONS (50-1,000 MICRONS)

GENERAL NOTES:
1. General Arrangement drawings only. Contact Hydro International for site specific drawings.
2. The diameter of the inlet and outlet pipes may be no more than 24".
3. Multiple inlet pipes possible (refer to project plan).
4. Inlet/outlet pipe angle can vary to align with drainage network (refer to project plan.s)
5. Peak flow rate and minimum height limited by available cover and pipe diameter.
6. Larger sediment storage capacity may be provided with a deeper sump depth.

PARTS LIST

ITEM	QTY	SIZE (in)	SIZE (mm)	DESCRIPTION
1	1	48	1200	I.D. PRECAST MANHOLE
2	1			INTERNAL COMPONENTS (PRE-INSTALLED)
3	1	30	750	FRAME AND COVER (ROUND)
4	1	24 (MAX)	600 (MAX)	OUTLET PIPE (BY OTHERS)
5	1	24 (MAX)	600 (MAX)	INLET PIPE (BY OTHERS)

ANY WARRANTY GIVEN BY HYDRO INTERNATIONAL WILL APPLY ONLY TO THOSE ITEMS SUPPLIED BY IT. ACCORDINGLY HYDRO INTERNATIONAL CANNOT ACCEPT ANY RESPONSIBILITY FOR ANY STRUCTURE, PLANT, OR EQUIPMENT, (OR THE PERFORMANCE THERE OF) DESIGNED, BUILT, MANUFACTURED, OR SUPPLIED BY ANY THIRD PARTY. HYDRO INTERNATIONAL HAVE A POLICY OF CONTINUOUS DEVELOPMENT AND RESERVE THE RIGHT TO AMEND THE SPECIFICATION. HYDRO INTERNATIONAL CANNOT ACCEPT LIABILITY FOR PERFORMANCE OF ITS EQUIPMENT, (OR ANY PART THEREOF), IF THE EQUIPMENT IS SUBJECT TO CONDITIONS OUTSIDE ANY DESIGN SPECIFICATION. HYDRO INTERNATIONAL OWNS THE COPYRIGHT OF THIS DRAWING, WHICH IS SUPPLIED IN CONFIDENCE. IT MUST NOT BE USED FOR ANY PURPOSE OTHER THAN THAT FOR WHICH IT IS SUPPLIED AND MUST NOT BE REPRODUCED, IN WHOLE OR IN PART, WITHOUT PRIOR PERMISSION IN WRITING FROM HYDRO INTERNATIONAL.

PROJECTION

IF IN DOUBT ASK

COMMENTS:

1. MANHOLE WALL AND SLAB THICKNESSES ARE NOT TO SCALE.

2. CONTACT HYDRO INTERNATIONAL FOR A BOTTOM OF STRUCTURE ELEVATION PRIOR TO SETTING FIRST DEFENSE MANHOLE.

3. CONTRACTOR TO CONFIRM RIM, PIPE INVERTS, PIPE DIA. AND PIPE ORIENTATION PRIOR TO RELEASE OF UNIT TO FABRICATION.

DATE:	SCALE:	
10/7/2019	1:30	
DRAWN BY: ER	CHECKED BY: MRJ	APPROVED BY

Title
4-ft DIAMETER

FIRST DEFENSE HIGH CAPACITY

GENERAL ARRANGEMENT

Hydro International®
hydro-int.com
HYDRO INTERNATIONAL

DO NOT SCALE DRAWING
STEEL FABRICATION TOLERANCES
UNLESS OTHERWISE SPECIFIED, DIMENSIONS ARE IN INCHES.

LINEAR
000 - 012in = ±0.04in
012 - 024in = ±0.06in
024 - 048in = ±0.08in
048 - 120in = ±0.12in
120in >>>> = ±0.20in

ANGULAR
000 - 120in = ±1°
120 - 240in = ±0.5°
240in >>>> = ±0.25°

WEIGHT:	MATERIAL:
N/A	

STOCK NUMBER:

DRAWING NO.: FDHC GA-4

SHEET SIZE:	SHEET:	Rev:
B	1 OF 1	-

APPENDIX I
CITY OF OTTAWA DESIGN CHECKLIST

McINTOSH PERRY

City of Ottawa

4. Development Servicing Study Checklist

The following section describes the checklist of the required content of servicing studies. It is expected that the proponent will address each one of the following items for the study to be deemed complete and ready for review by City of Ottawa Infrastructure Approvals staff.

The level of required detail in the Servicing Study will increase depending on the type of application. For example, for Official Plan amendments and re-zoning applications, the main issues will be to determine the capacity requirements for the proposed change in land use and confirm this against the existing capacity constraint, and to define the solutions, phasing of works and the financing of works to address the capacity constraint. For subdivisions and site plans, the above will be required with additional detailed information supporting the servicing within the development boundary.

4.1 General Content

Criteria	Location (if applicable)
☐ Executive Summary (for larger reports only).	N/A
☐ Date and revision number of the report.	On Cover
☐ Location map and plan showing municipal address, boundary, and layout of proposed development.	Appendix E
☐ Plan showing the site and location of all existing services.	Site Servicing Plan (C102)
☐ Development statistics, land use, density, adherence to zoning and official plan, and reference to applicable subwatershed and watershed plans that provide context to which individual developments must adhere.	1.1 Purpose 1.2 Site Description 6.0 Stormwater Management
☐ Summary of pre-consultation meetings with City and other approval agencies.	Appendix A
☐ Reference and confirm conformance to higher level studies and reports (Master Servicing Studies, Environmental Assessments, Community Design Plans), or in the case where it is not in conformance, the proponent must provide justification and develop a defendable design criteria.	1.1 Purpose 1.2 Site Description 6.0 Stormwater Management
☐ Statement of objectives and servicing criteria.	3.0 Pre-Consultation Summary

☐ Identification of existing and proposed infrastructure available in the immediate area.	N/A
☐ Identification of Environmentally Significant Areas, watercourses and Municipal Drains potentially impacted by the proposed development (Reference can be made to the Natural Heritage Studies, if available).	Site Grading, Drainage, Sediment & Erosion Control Plan (C101)
☐ Concept level master grading plan to confirm existing and proposed grades in the development. This is required to confirm the feasibility of proposed stormwater management and drainage, soil removal and fill constraints, and potential impacts to neighbouring properties. This is also required to confirm that the proposed grading will not impede existing major system flow paths.	Site Grading, Drainage, Sediment & Erosion Control Plan (C101)
☐ Identification of potential impacts of proposed piped services on private services (such as wells and septic fields on adjacent lands) and mitigation required to address potential impacts.	N/A
☐ Proposed phasing of the development, if applicable.	N/A
☐ Reference to geotechnical studies and recommendations concerning servicing.	Section 2.0 Backround Studies
☐ All preliminary and formal site plan submissions should have the following information: o Metric scale o North arrow (including construction North) o Key plan o Name and contact information of applicant and property owner o Property limits including bearings and dimensions o Existing and proposed structures and parking areas o Easements, road widening and rights-of-way o Adjacent street names	Site Grading, Drainage, Sediment & Erosion Control Plan (C101)

4.2 Development Servicing Report: Water

Criteria	Location (if applicable)
☐ Confirm consistency with Master Servicing Study, if available	N/A
☐ Availability of public infrastructure to service proposed development	N/A
☐ Identification of system constraints	N/A
☐ Identify boundary conditions	N/A
☐ Confirmation of adequate domestic supply and pressure	N/A
☐ Confirmation of adequate fire flow protection and confirmation that fire flow is calculated as per the Fire Underwriter's Survey. Output should show available fire flow at locations throughout the development.	Appendix B
☐ Provide a check of high pressures. If pressure is found to be high, an assessment is required to confirm the application of pressure reducing valves.	N/A
☐ Definition of phasing constraints. Hydraulic modeling is required to confirm servicing for all defined phases of the project including the ultimate design	N/A
☐ Address reliability requirements such as appropriate location of shut-off valves	N/A
☐ Check on the necessity of a pressure zone boundary modification.	N/A
☐ Reference to water supply analysis to show that major infrastructure is capable of delivering sufficient water for the proposed land use. This includes data that shows that the expected demands under average day, peak hour and fire flow conditions provide water within the required pressure range	N/A

☐ Description of the proposed water distribution network, including locations of proposed connections to the existing system, provisions for necessary looping, and appurtenances (valves, pressure reducing valves, valve chambers, and fire hydrants) including special metering provisions.	N/A
☐ Description of off-site required feedermains, booster pumping stations, and other water infrastructure that will be ultimately required to service proposed development, including financing, interim facilities, and timing of implementation.	N/A
☐ Confirmation that water demands are calculated based on the City of Ottawa Design Guidelines.	Appendix B
☐ Provision of a model schematic showing the boundary conditions locations, streets, parcels, and building locations for reference.	N/A

4.3 Development Servicing Report: Wastewater

Criteria	Location (if applicable)
☐ Summary of proposed design criteria (Note: Wet-weather flow criteria should not deviate from the City of Ottawa Sewer Design Guidelines. Monitored flow data from relatively new infrastructure cannot be used to justify capacity requirements for proposed infrastructure).	N/A
☐ Confirm consistency with Master Servicing Study and/or justifications for deviations.	N/A
☐ Consideration of local conditions that may contribute to extraneous flows that are higher than the recommended flows in the guidelines. This includes groundwater and soil conditions, and age and condition of sewers.	N/A
☐ Description of existing sanitary sewer available for discharge of wastewater from proposed development.	Section 5.2 Sanitary Sewer

☐ Verify available capacity in downstream sanitary sewer and/or identification of upgrades necessary to service the proposed development. (Reference can be made to previously completed Master Servicing Study if applicable)	N/A
☐ Calculations related to dry-weather and wet-weather flow rates from the development in standard MOE sanitary sewer design table (Appendix 'C') format.	N/A
☐ Description of proposed sewer network including sewers, pumping stations, and forcemains.	Section 5.2 Sanitary Sewer
☐ Discussion of previously identified environmental constraints and impact on servicing (environmental constraints are related to limitations imposed on the development in order to preserve the physical condition of watercourses, vegetation, soil cover, as well as protecting against water quantity and quality).	N/A
☐ Pumping stations: impacts of proposed development on existing pumping stations or requirements for new pumping station to service development.	N/A
☐ Forcemain capacity in terms of operational redundancy, surge pressure and maximum flow velocity.	N/A
☐ Identification and implementation of the emergency overflow from sanitary pumping stations in relation to the hydraulic grade line to protect against basement flooding.	N/A
☐ Special considerations such as contamination, corrosive environment etc.	N/A

4.4 Development Servicing Report: Stormwater Checklist

Criteria	Location (if applicable)
☐ Description of drainage outlets and downstream constraints including legality of outlets (i.e. municipal drain, right-of-way, watercourse, or private property)	Section 6.0 Stormwater Management
☐ Analysis of available capacity in existing public infrastructure.	N/A
☐ A drawing showing the subject lands, its surroundings, the receiving watercourse, existing drainage patterns, and proposed drainage pattern.	Pre & Post-Development Plans
☐ Water quantity control objective (e.g. controlling post-development peak flows to pre-development level for storm events ranging from the 2 or 5-year event (dependent on the receiving sewer design) to 100-year return period); if other objectives are being applied, a rationale must be included with reference to hydrologic analyses of the potentially affected subwatersheds, taking into account long-term cumulative effects.	Section 6.0 Stormwater Management
☐ Water Quality control objective (basic, normal or enhanced level of protection based on the sensitivities of the receiving watercourse) and storage requirements.	Section 6.0 Stormwater Management
☐ Description of the stormwater management concept with facility locations and descriptions with references and supporting information.	Section 6.0 Stormwater Management
☐ Set-back from private sewage disposal systems.	N/A
☐ Watercourse and hazard lands setbacks.	N/A
☐ Record of pre-consultation with the Ontario Ministry of Environment and the Conservation Authority that has jurisdiction on the affected watershed.	N/A
☐ Confirm consistency with sub-watershed and Master Servicing Study, if applicable study exists.	N/A
☐ Storage requirements (complete with calculations) and conveyance capacity for minor events (1:5-year return period) and major events (1:100-year return period).	Appendix F

☐ Identification of watercourses within the proposed development and how watercourses will be protected, or, if necessary, altered by the proposed development with applicable approvals.	Site Grading, Drainage, Sediment & Erosion Control Plan
☐ Calculate pre-and post development peak flow rates including a description of existing site conditions and proposed impervious areas and drainage catchments in comparison to existing conditions.	Section 6.0 Stormwater Management Appendix F
☐ Any proposed diversion of drainage catchment areas from one outlet to another.	Section 6.0 Stormwater Management
☐ Proposed minor and major systems including locations and sizes of stormwater trunk sewers, and stormwater management facilities.	Section 6.0 Stormwater Management
☐ If quantity control is not proposed, demonstration that downstream system has adequate capacity for the post-development flows up to and including the 100-year return period storm event.	Appendix A
☐ Identification of potential impacts to receiving watercourses	N/A
☐ Identification of municipal drains and related approval requirements.	N/A
☐ Descriptions of how the conveyance and storage capacity will be achieved for the development.	Section 6.0 Stormwater Management
☐ 100-year flood levels and major flow routing to protect proposed development from flooding for establishing minimum building elevations (MBE) and overall grading.	Site Grading, Drainage, Sediment & Erosion Control Plan (C101)
☐ Inclusion of hydraulic analysis including hydraulic grade line elevations.	N/A

☐ Description of approach to erosion and sediment control during construction for the protection of receiving watercourse or drainage corridors.	Section 7.0 Sediment & Erosion Control
☐ Identification of floodplains – proponent to obtain relevant floodplain information from the appropriate Conservation Authority. The proponent may be required to delineate floodplain elevations to the satisfaction of the Conservation Authority if such information is not available or if information does not match current conditions.	N/A
☐ Identification of fill constraints related to floodplain and geotechnical investigation.	N/A

4.5 Approval and Permit Requirements: Checklist

The Servicing Study shall provide a list of applicable permits and regulatory approvals necessary for the proposed development as well as the relevant issues affecting each approval. The approval and permitting shall include but not be limited to the following:

Criteria	Location (if applicable)
☐ Conservation Authority as the designated approval agency for modification of floodplain, potential impact on fish habitat, proposed works in or adjacent to a watercourse, cut/fill permits and Approval under Lakes and Rivers Improvement Act. The Conservation Authority is not the approval authority for the Lakes and Rivers Improvement Act. Where there are Conservation Authority regulations in place, approval under the Lakes and Rivers Improvement Act is not required, except in cases of dams as defined in the Act.	N/A
☐ Application for Certificate of Approval (CofA) under the Ontario Water Resources Act.	N/A
☐ Changes to Municipal Drains.	N/A
☐ Other permits (National Capital Commission, Parks Canada, Public Works and Government Services Canada, Ministry of Transportation etc.)	N/A

4.6 Conclusion Checklist

Criteria	Location (if applicable)
☐ Clearly stated conclusions and recommendations	Section 8.0 Summary Section 9.0 Recommendations
☐ Comments received from review agencies including the City of Ottawa and information on how the comments were addressed. Final sign-off from the responsible reviewing agency.	All are stamped
☐ All draft and final reports shall be signed and stamped by a professional Engineer registered in Ontario	All are stamped