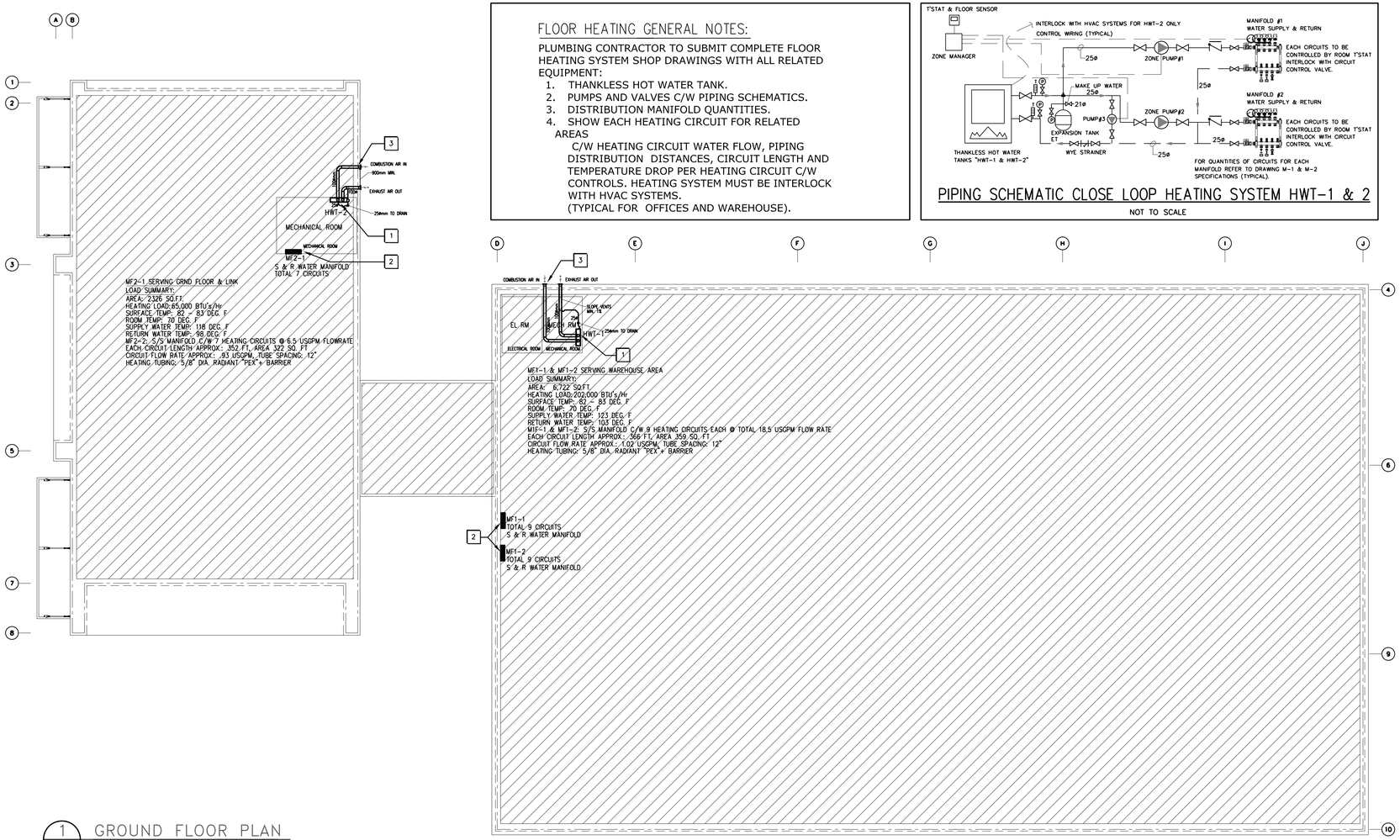

1 M1 GROUND FLOOR PLAN
SCALE: 1: 100

FLOOR HEATING GENERAL NOTES:

PLUMBING CONTRACTOR TO SUBMIT COMPLETE FLOOR HEATING SYSTEM SHOP DRAWINGS WITH ALL RELATED EQUIPMENT:

1. THANKLESS HOT WATER TANK.
2. PUMPS AND VALVES C/W PIPING SCHEMATICS.
3. DISTRIBUTION MANIFOLD QUANTITIES.
4. SHOW EACH HEATING CIRCUIT FOR RELATED AREAS
   C/W HEATING CIRCUIT WATER FLOW, PIPING DISTRIBUTION DISTANCES, CIRCUIT LENGTH AND TEMPERATURE DROP PER HEATING CIRCUIT C/W CONTROLS. HEATING SYSTEM MUST BE INTERLOCK WITH HVAC SYSTEMS.
   (TYPICAL FOR OFFICES AND WAREHOUSE).

PIPING SCHEMATIC CLOSE LOOP HEATING SYSTEM HWT-1 & 2

NOT TO SCALE

MECHANICAL LEGEND

PENDANT / UPRIGHT	SPRINKLER HEADS	—+—	BURIED SANITARY SEWER PIPE
	BALANCING VALVE	—++—	BURIED STORM SEWER PIPE
	GATE VALVE	—– –—	DOMESTIC COLD WATER SUPPLY
	CHECK VALVE	— – – —	DOMESTIC HOT WATER SUPPLY
	SAFETY RELIEF VALVE	— S —	WET TYPE SPRINKLER PIPE
	2 WAY CONTROL VALVE	— G —	NATURAL GAS PIPING
	PIPING "UP"	—RWL—	RAIN WATER LEADER
	PIPING "DOWN"	— V —	PLUMBING VENT PIPING
	UNION		ABOVE GROUND SANITARY SEWER PIPE
	PRESSURE GAUGE	F.D.	FIRE DAMPER
	MECHANICAL WATER PUMP		SUPPLY AIR DUCT
	TEMPERATURE SENSOR (AIR)		RETURN AIR DUCT
TS	TAMPER SWITCH (SPRINKLER SYSTEM)		ACOUSTIC INSULATION
FS	FLOW SWITCH (SPRINKLER SYSTEM)		THERMAL INSULATION
		B.D.	BALANCING DAMPER

MECHANICAL DRAWING NOTES:

1. PROVIDE TWO THANKLESS WALL MOUNTED HOT WATER TANKS "HWT-1 & HWT-2" REFER TO SPECIFICATIONS FOR DETAILS. THE CONTRACTOR TO INSTALL NEW HOT WATER TANKS WATER PIPING, DRAINS, VENTS AND CONTROLS AS PER MANUFACTURER SPECIFICATIONS AND INSTALLATION GUIDE LINE STANDARDS.
2. PROVIDE HORIZONTAL PARALLEL VENTING SYSTEM (TWIN PIPE DIRECT VENT) OR CONCENTRIC HORIZONTAL VENTS FOR "HWT-1" AND "HWT-2" ALL WORK TO BE PERFORM AS PER MANUFACTURER SPECIFICATIONS AND INSTALLATION GUIDE LINE STANDARDS.
3. PROVIDE FOUR (4) HOT WATER SUPPLY AND RETURN FLOOR HEATING DISTRIBUTION MANIFOLDS REFER TO SPECIFICATIONS AND PIPING SCHEMATICS. EXACT MANIFOLDS LOCATION TO BE DETERMINETED ON SITE PRIOR TO FLOOR HEATING SYSTEM INSTALLATIONS.

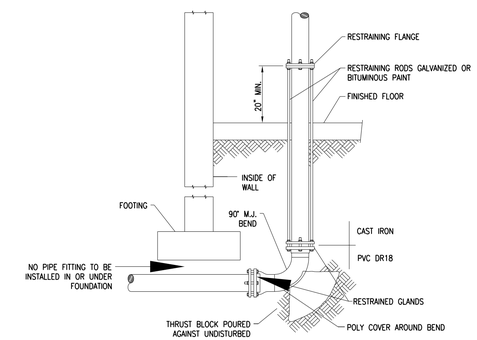

2 M1 MAIN WATER SERVICE INSTALLATION
SCALE: N.I.S.

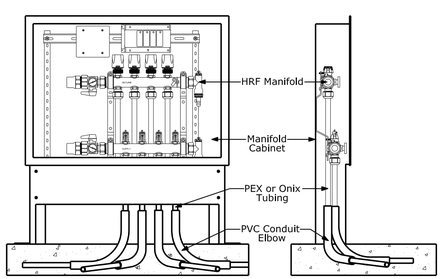

TYPICALWATER PIPING SLAB ENTRY DETAIL

NOT TO SCALE

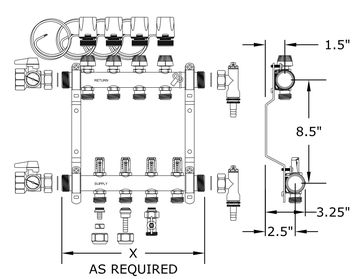

TYPICAL WATER SUPPLY & RETURN MANIFOLD DETAIL

NOT TO SCALE

GENERAL NOTES

Protect Radiant PEX/Onix at expansion joints.
When RadiantPEX/Onix is installed under expansion joints or control cuts the piping must be either sleeved with a protective layer of insulation, or the piping must dip under the slab into the underlying base material.

Avoid Excessive Pressure and Temperature.
RadiantPEX is rated up to 73°F at 160 psi, 180°F at 100 psi, or 200°F at 80 psi. Onix is rated up to 180°F at 100 psi. Do not exceed these temperature and pressure ratings. Exceeding rated temperature or pressure will void warranty.

Protect From Sharp or Abrasive Hangers.
RadiantPEX/Onix can be damaged by metal hangers with sharp or abrasive edges; do not use them.
Do not use hangers, staples, or fasteners that crush or pinch pipe. Be careful when using hangers or fasteners. Make sure they are not driven in too far and damage the pipe. Do not use tubing if it has visible gouges, cuts, cracks, abrasions, signs of physical damage, or other defects.

Protect From Excessive Heat.
RadiantPEX/Onix must be protected against excessive heat.
Soldering - never solder next to RadiantPEX/Onix.

Water Heaters and Boilers - use a minimum of 18" of metal tubing to transition between water heaters/gas boilers and RadiantPEX/Onix.

Recessed Electrical Devices - maintain at least 12" of separation between all devices and RadiantPEX/Onix.

Gas Appliance Vents - maintain at least 6" of separation between RadiantPEX/Onix on all gas appliance vents.

Protect From Chemicals.
Do not expose RadiantPEX/Onix to any chemicals internally or externally, other than water or water/glycol solutions.

Adhesive Tape - RadiantPEX can also be damaged by some adhesives found in many adhesive tapes. Do not apply adhesive tape to any PEX.

Pipe Dope, Threading Componds, Mineral or Linseed Oils.
RadiantPEX/Onix is damaged by some of the materials found in pipe dope, mineral oil, putty, cutting oil, and similiar compounds. Do not expose RadiantPEX/Onix to these materials.

Petroleum Products - RadiantPEX/Onix is damaged by petroleum products such as gasoline, diesel fuel, cutting oil, brake and transmission fluids, and others. Do no expose RadiantPEX/Onix to these materials. Do not bury RadiantPEX/Onix in soil that is contaminated with these materials.

Chlorine - Do not use RadiantPEX/Onix in systems that use high levels of chlorine.

Handling and Care of RadiantPEX/Onix.
Reasonable care and protection must be taken to protect RadiantPEX from damage, both before and during the construction process.

Protect Against Freezing.
While RadiantPEX/Onix is resistant to freeze damage, we recommend that all systems be protected from freezing in a manner typical of the area. RadiantPEX/Onix cannot prevent damage to materials if the system freezes. RadiantPEX/Onix fittings and field connections can be damaged if a system is allowed to freeze.

Sunlight Exposure.
Do not expose RadiantPEX to more than 30 days of direct sunlight. It will damage the pipe and void the warranty. If stored outside, tubing must remain covered by a UV resistant material.

Temperature Range.
Caution should be exercised when installing RadiantPEX/Onix at temperatures below freezing. The pipe is more easily damaged and kinked when installed at these temperatures. In very cold weather you may wish to warm the pipe up in a heated area before installing it. If connections must be made in temperatures lower than 30°F, caution must be taken to allow the RadiantPEX/Onix to form a proper seal against the barb. Apply connection slowly to ensure the PEX material conforms to the barb.

System Design and Components
This drawing is provided to show a general arrangemet of the proposed radiant floor heating system. Contractor shall submit shop drawings and design schematic drawings to show design parameters and all components including boiler, venting, primary piping, secondary piping, manifolds, feed water, expansion tank, primary/secondary pumping, controls, electrical connections, etc.

Antares Engineering Group Inc.
Professional Mechanical, Electrical, Testing and Research Engineers
38 Sachs Forest Place, Ottawa, Ontario, K2E 7J4
Phone (613) 723-6034; e-mail: mail@antaresengineering.ca

NO.	DESCRIPTION	
3.	ISSUED FOR TENDER	15/01/2021
2.	TENDER FOR PRE-ENG. BUILDING STRUCTURE - ONLY	14/12/2020
1.	ISSUED FOR CLIENT REVIEW	15/11/2020

REVISIONS

CONTRACTOR SHALL CHECK AND VERIFY ALL DIMENSIONS AND REPORT ANY OMISSIONS OR DISCREPANCIES TO THE ENGINEER BEFORE PROCEEDING WITH THE WORK

DO NOT SCALE DRAWINGS

THIS DRAWING SHALL NOT BE USED FOR CONSTRUCTION PURPOSES UNTIL SIGNED BY THE ENGINEER

DATE JYLY 2020

DRAWN S.S.

DATE JULY 2020

CHECKED J.C.J.

ISSUED 15 JULY 2020

CONSULTANT

CONSULTANT

S.J. LAWRENCE ARCHITECTURAL I n c.
18 DEAKING STREET SUITE 205 NEPEAN, ,ONTARIO K2E 8B7
TEL (613) 739 7770 e-mail; brandon@sjarchitect.com

PROJECT

CITYSCAPE COMMERCIAL WAREHOUSE

144 BENTLEY AVENUE OTTAWA,ONTARIO

DRAWING

MECHANICAL
HYDRONIC FLOOR HEATING SYSTEM AND DETAILS

SCALE AS SHOWN

PROJ. NO. AEG 20-727

SHEET M-1

REV.

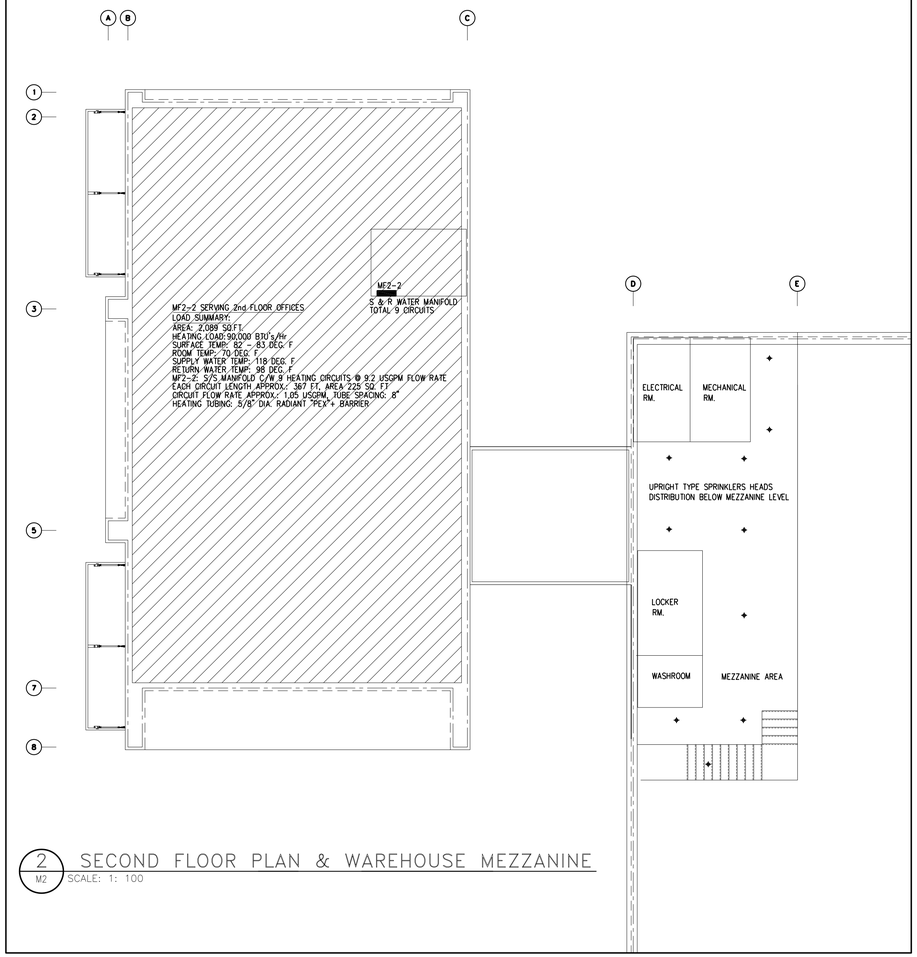

2 M2 SECOND FLOOR PLAN & WAREHOUSE MEZZANINE

SCALE: 1: 100

PUMP SCHEDULE

TAG NO.		APPLICATION	MANUFACTURE & MODEL NO.	FLOW	HEAD	FLUID	MOTOR			CONNECT.	
							POWER	V/PH/HZ	RPM		
HWT-1 SYSTEM WAREHOUSE	P-1	FLOOR HEAT.	GRUNFOS MAGMA 32-60	9.25 GPM	14 FT	WATER	103W	208/1/60	1170	1-1/4"	PIPE MOUNTED, CAST IRON BODY, INTEGRAL VARIABLE SPEED DRIVE
	P-2	FLOOR HEAT.	GRUNFOS MAGMA 32-60	9.25 GPM	14 FT	WATER	103W	208/1/60	1170	1-1/4"	PIPE MOUNTED, CAST IRON BODY, INTEGRAL VARIABLE SPEED DRIVE
	P-3	FLOOR HEAT.	GRUNFOS MAGMA 32-40	4 GPM	8 FT	WATER	103W	208/1/60	1170	1-1/4"	PIPE MOUNTED, CAST IRON BODY, INTEGRAL VARIABLE SPEED DRIVE
HWT-2 SYSTEM OFFICES	P-1	FLOOR HEAT.	GRUNFOS MAGMA 32-60	6.5 GPM	14 FT	WATER	103W	208/1/60	1170	1-1/4"	PIPE MOUNTED, CAST IRON BODY, INTEGRAL VARIABLE SPEED DRIVE
	P-2	FLOOR HEAT.	GRUNFOS MAGMA 32-60	9.2 GPM	16 FT	WATER	103W	208/1/60	1170	1-1/4"	PIPE MOUNTED, CAST IRON BODY, INTEGRAL VARIABLE SPEED DRIVE
	P-3	FLOOR HEAT.	GRUNFOS MAGMA 32-40	4 GPM	8 FT	WATER	103W	208/1/60	1170	1-1/4"	PIPE MOUNTED, CAST IRON BODY, INTEGRAL VARIABLE SPEED DRIVE

GENERAL NOTE:
GRUNFOS PUMPS OR EQUAL.
FOR PIPING LAYOUT AND ALL RELATED DEVICES REFER TO DRAWING M-1 DETAIL:
"PIPING SCHEMATIC CLOSE LOOP HEATING SYSTEM"

1. RADIANT FLOOR HEATING FOR WAREHOUSE:
TOTAL FLOW RATE OF 18.5 USGPM @ 14 FT. HD. WITH A DESIGN TEMP. DROP OF 20 DEG. F WITH 100% WATER.

TOTAL FLOOR HEATING LOAD OF 180,000 BTU/Hr OUTPUT.
SUPPLY WATER TEMP: 123 DEG. F.
RETURN WATER TEMP: 103 DEG. F.

HWT-1 SYSTEM C/W WATTS THERMAL-PRO CUSTOM RADIANT FLOOR HEATING PANEL C/W SECONDARY PUMP, FLOOR HEATING CONTROL AND SLAB SENSOR. BOILER SHALL BE INDOOR COMMERCIAL NATURAL GAS THANKLESS HOT WATER HEATER BOSCH MODEL # C 1210/ESC 65.9 KW IN PUT (225MBH) OR EQUAL.

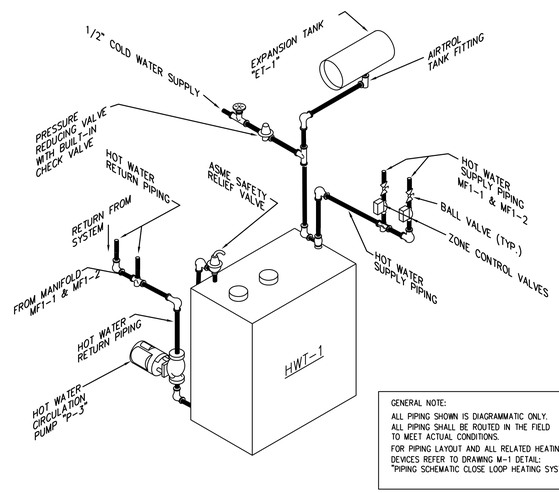

GENERAL NOTE:
ALL PIPING SHOWN IS DIAGRAMMATIC ONLY.
ALL PIPING SHALL BE ROUTED IN THE FIELD TO MEET ACTUAL CONDITIONS.
FOR PIPING LAYOUT AND ALL RELATED HEATING DEVICES REFER TO DRAWING M-1 DETAIL:
"PIPING SCHEMATIC CLOSE LOOP HEATING SYSTEM"

HEATING BOILER FOR SLAB HEATING SYSTEM WAREHOUSE AREA

NOT TO SCALE

1. RADIANT FLOOR HEATING FOR GROUND AND 2ND FLOOR OFICES:
TOTAL FLOW RATE OF 16 USGPM @ 16 FT. HD. WITH A DESIGN TEMP. DROP OF 20 DEG. F WITH 100% WATER.

TOTAL FLOOR HEATING LOAD OF 140,000 BTU/Hr OUTPUT.
SUPPLY WATER TEMP: 118 DEG. F.
RETURN WATER TEMP: 98 DEG. F.

HWT-2 SYSTEM C/W WATTS THERMAL-PRO CUSTOM RADIANT FLOOR HEATING PANEL C/W SECONDARY PUMP, FLOOR HEATING CONTROL AND SLAB SENSOR. BOILER SHALL BE INDOOR COMMERCIAL NATURAL GAS THANKLESS WATER HEATER BOSCH MODEL # C 1210/ESC 65.9 KW IN PUT (225MBH) OR EQUAL.

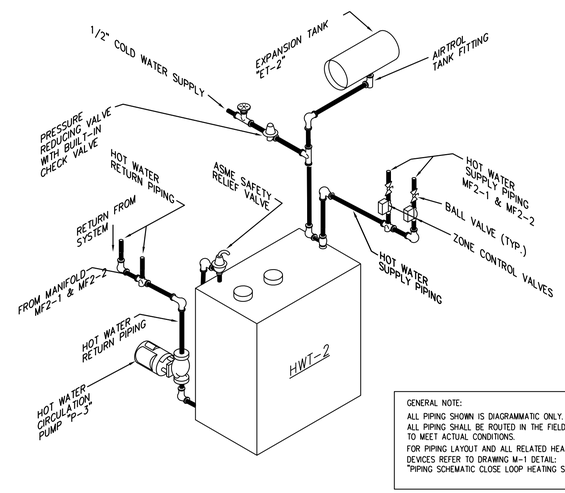

GENERAL NOTE:
ALL PIPING SHOWN IS DIAGRAMMATIC ONLY.
ALL PIPING SHALL BE ROUTED IN THE FIELD TO MEET ACTUAL CONDITIONS.
FOR PIPING LAYOUT AND ALL RELATED HEATING DEVICES REFER TO DRAWING M-1 DETAIL:
"PIPING SCHEMATIC CLOSE LOOP HEATING SYSTEM"

HEATING BOILER FOR SLAB HEATING SYSTEM OFFICES AREAS

NOT TO SCALE

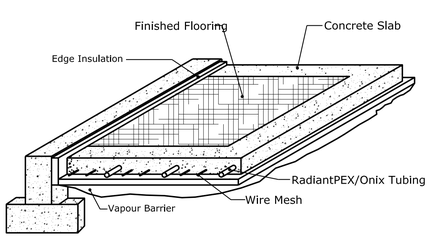

CONCRETE SLAB ON GRADE

NOT TO SCALE

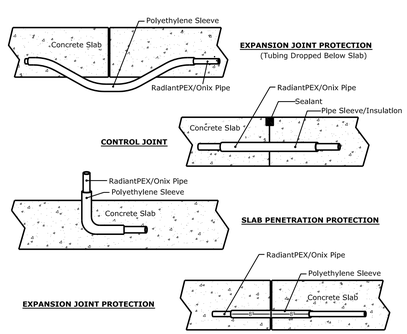

TUBE PROTECTION DETAIL

NOT TO SCALE

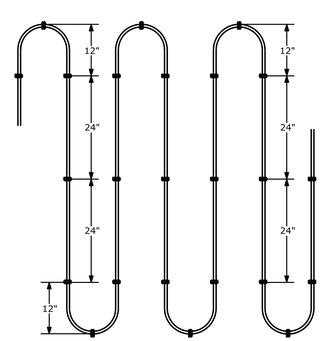

TUBE TIE DOWN SPACING DETAIL

NOT TO SCALE

GENERAL NOTES (Cont'd):

1. PIPE TO BE WATTS RADIANTPEX OR ONIX AS SUPPLIED BY WATTSRADIANT CANADA.
2. MANIFOLDS TO BE WATTSRADIANT STAINLESS STEEL UNITS COMPLETE WITH SUPPLY AND RETURN TRUNK ISOLATION VALVES AND VENT PURGE ASSEMBLY.
3. LOOP LENGTHS ON DRAWING OR SCHEDULE ARE AN APPROXIMATION ONLY. ACTUAL LOOP LENGTHS TO BE VERIFIED ON SITE BY INSTALLING CONTRACTOR.
4. RADIANT TUBING TO BE SPACED AT 12" ON CENTRES, EXCEPT WHERE NOTED ON THE LOOP SCHEDULE OR ON THE PLANS, AND TO BE PLACED 6" TO 12" FROM EXTERIOR WALLS.
5. AVERAGE FLOOR SURFACE TEMPERATURE SHOULD NOT EXCEED 87°F. THIS WILL LIMIT THE MAXIMUM UPWARD OUTPUT TO 38 BTU/FT^2 AT 68°F.
6. THE MINIMUM CONCRETE COVER SHALL BE 1" ABOVE THE TOP OF THE TUBING.
7. TUBING SHALL BE SLEEVED AT ALL CONTROL JOINT CROSSINGS (SEE ILLUSTRATIONS).
8. USE RIDGID POLYETHYLENE SLEEVES TO PROTECT TUBING WHEN PENETRATING SLAB.
9. TUBING SHALL BE FASTENED EVERY 24" IN SLAB AND TOPPING POUR APPLICATIONS USING THE APPROPRIATE FASTENERS.
10. KEEP TUBING A MINIMUM OF 9" AWAY FROM ALL CLOSET FLANGES AND DRAIN TRAPS.
11. A MINIMUM R-5 INSULATION IS RECOMMENDED UNDER THE PERIMETER OF THE RADIANT HEATED SLAB.
12. THE SYSTEM SHALL BE PRESSURE TESTED PRIOR TO AND DURING THE CONCRETE POUR TO AT LEAST TWO TIMES THE OPERATING PRESSURE OR 60 PSIG WITH WATER OR AIR. PRESSURE TEST SHALL REMAIN ON DURING THE FINAL FLOOR INSTALLATION.
13. IF THE JOB SITE IS SUBJECT TO FREEZING DURING THE CONSTRUCTION PROCESS A PROPYLENE GLYCOL/WATER SOLUTION, OF THE APPROPRIATE MIXTURE FOR THE LOCATION, SHALL BE USED TO PREVENT FREEZING.
14. UNLESS OTHERWISE INDICATED, PRESSURE DROPS SHOWN ON LOOP SCHEDULE INCLUDE PRESSURE DROPS FOR MANIFOLD AND TUBING ONLY.
15. RADIANT INSTALLATION SHALL BE IN ACCORDANCE WITH EITHER WATTSRADIANT INSTALLATION MANUAL FOR RADIANTPEX OR WATTSRADIANT INSTALLATION MANUAL FOR ONIX DEPENDING ON TUBING TYPE USED.
16. THE INFORMATION ON THESE DRAWINGS OR IN THESE NOTES DOES NOT REPLACE THE REQUIREMENTS OF LOCAL CODES OR THE RECOMMENDATIONS OF THE PROJECT ENGINEERING FIRM AND ARE PROVIDED AS A GENERAL REFERENCE ONLY. PLEASE CHECK WITH THE AUTHORITY HAVING JURISDICTION IF IN DOUBT OF ANY ACTUAL BUILDING CODE REQUIREMENTS.

Antares Engineering Group Inc.
Professional Mechanical, Electrical, Testing and Research Engineers
38 Sachs Forest Place, Ottawa, Ontario, K2E 7J4
Phone (613) 723-6034; e-mail: mail@antaresengineering.ca

NO.	DESCRIPTION	
3.	ISSUED FOR TENDER	15/01/2021
2.	TENDER FOR PRESENG. BUILDING STRUCTURE - ONLY	14/12/2020
1.	ISSUED FOR CLIENT REVIEW	15/11/2020

REVISIONS

CONTRACTOR SHALL CHECK AND VERIFY ALL DIMENSIONS AND REPORT ANY OMISSIONS OR DISCREPANCIES TO THE ENGINEER BEFORE PROCEEDING WITH THE WORK

DO NOT SCALE DRAWINGS

THIS DRAWING SHALL NOT BE USED FOR CONSTRUCTION PURPOSES UNTIL SIGNED BY THE ENGINEER

DATE JYLY 2020

DRAWN S.S.

DATE JULY 2020

CHECKED J.C.J.

ISSUED 15 JULY 2020

CONSULTANT

CONSULTANT

S.J. LAWRENCE ARCHITECTURAL I n c.
18 DEAKING STREET SUITE 205 NEPEAN, ,ONTARIO K2E 8B7
TEL (613) 739 7770 e-mail: brandon@sjarchitect.com

PROJECT

CITYSCAPE COMMERCIAL WAREHOUSE

144 BENTLEY AVENUE OTTAWA,ONTARIO

DRAWING

MECHANICAL
HYDRONIC FLOOR HEATING SYSTEM AND DETAILS

SCALE AS SHOWN

SHEET M-2

PROJ. NO. AEG 20-727

REV.

GENERAL SPRINKLER NOTES:

A. INSTALLATION OF WET AND DRY SPRINKLER SYSTEMS MUST BE PERFORMED IN ACCORDANCE TO "NFPA 13" AND ACCEPTABLE TO THE AUTHORITY HAVING JURISDICTION.

B. PREPARE NEW BUILDING SPRINKLER LAYOUTS FOR LIGHT HAZARD OCCUPANCY.

C. SPRINKLER CONTRACTOR TO PROVIDE INSTALLATION WORKING DRAWING COMPLETE HYDRAULIC CALCULATIONS AND SUBMIT SUMMARY SHEETS COMPLETE WITH ALL DETAILS FOR ENGINEER'S REVIEW AND COMMENTS PRIOR TO INSTALLATION.

D. PROVIDE SYSTEM TEST CONNECTIONS FOR WET & DRY PIPE SYSTEM AS REQUIRED BY "NFPA 13".

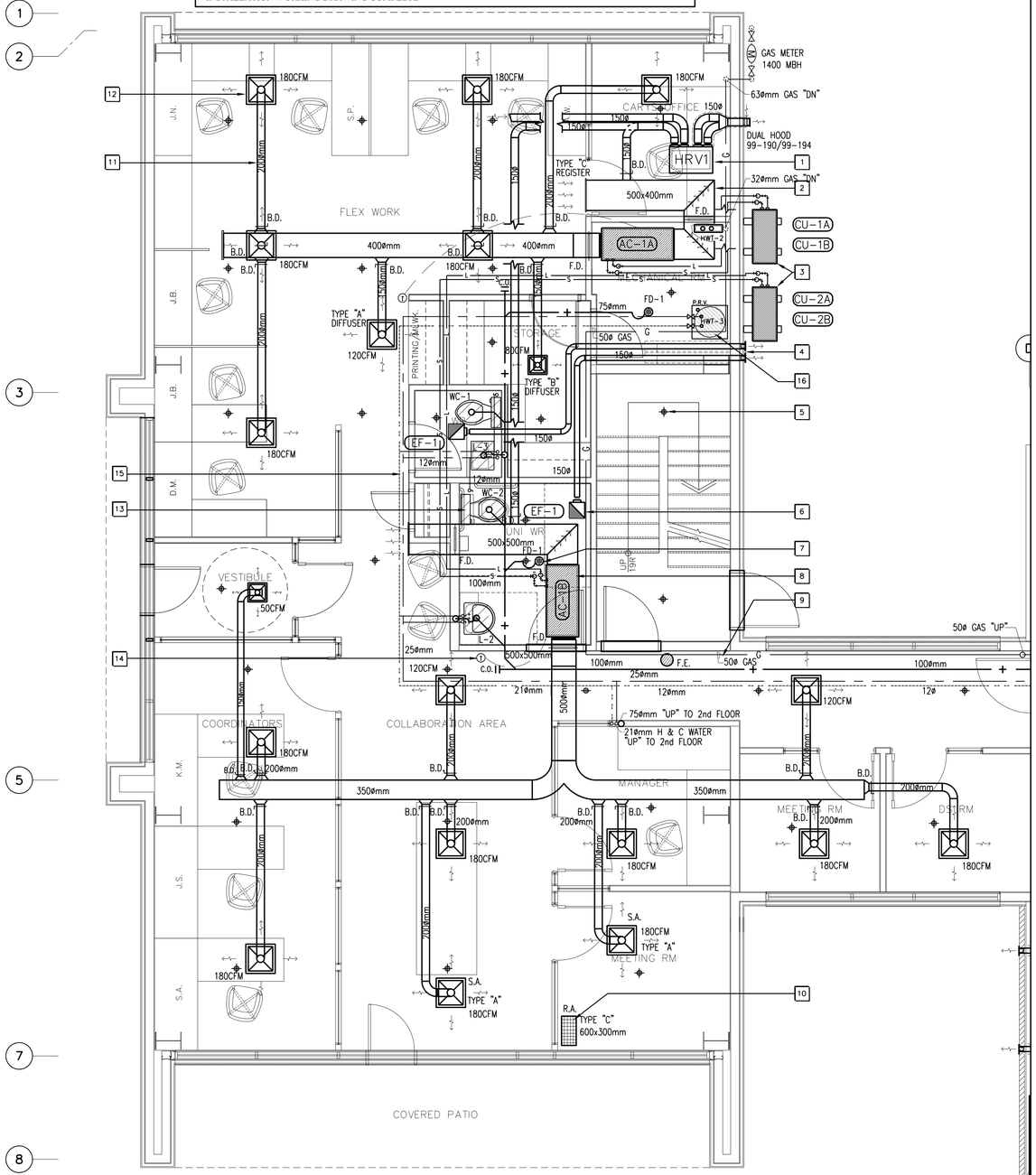

1 PARTIAL GROUND FLOOR PLAN
M3 SCALE: 1: 50

EXHAUST FAN SCHEDULE

EQUIPMENT NO.	SERVICE	CFM @ S.P.	WATTS	RPM	VOLT.-PH.-CY.	MANUFACTURER & MODEL	OPTIONS-ACCESSORIES
EF-1	WASHROOMS & JANITOR ROOM	75 @ 0.5" W.C.	100	710	120/1/60	BROAN QTXE 85 OR EQUAL.	DIRECT DRIVE, CEILING CABINET TYPE FAN. LIGHT SWITCH CONTROL, BACKDRAFT DAMPER.
EF-2	MECHANICAL ROOMS	100 @ 0.38" W.C.	120	920	120/1/60	BROAN QTXE 110 OR EQUAL.	DIRECT DRIVE, CEILING CABINET TYPE FAN. TIME CLOCK CONTROL, BACKDRAFT DAMPER.
EF-3	MEETING ROOM	200 @ 0.38" W.C.	120	1250	120/1/60	BROAN QTXE 150 OR EQUAL.	DIRECT DRIVE, CEILING CABINET TYPE FAN. SPEED SWITCH CONTROL, BACKDRAFT DAMPER.

NOTES:
1. MOTORS TO BE PREMIUM EFFICIENCY TYPE.
2. COMPLETE WITH VIBRATION ISOLATION.
3. CO-ORDINATE WITH ELECTRICAL TRADE.

GAS UNIT HEATER SCHEDULE

UNIT REF	MANUFACTURER	MODEL #	HEATING MBH IN	HEATING MBH OUT	SUPPLY FAN CFM	SUPPLY FAN EXT. SP	SUPPLY FAN HP	VOLT./PH.	WEIGHT LBS	MOUNTING ARRANGEMENT	REMARKS
UH-1 TO UH-8	MODINE	MODINE HDS HDS-100	100	82	1,490	.3	1/3	120/1	150	HANGERS C/W ISOLATORS	TWO STAGE GAS FIRED UNIT HEATER C/W WALL MOUNTED TWO STAGE THERMOSTAT, 30 DEG. DOWNWARD DEFLECTOR HOOD, DIRECT SPARK IGNITION VENTING: 4"ø ROOF VERTICAL CONCENTRIC VENT KIT.

FAN COIL SPLIT AIR CONDITIONING SYSTEM SCHEDULE

UNIT REF	NOM. TONS	MANUFACTURER	MODEL No.	TYPE	REFRIGERANT PIPING LIQUID	REFRIGERANT PIPING SUCTION	SUPPLY FAN CFM HIGH	SUPPLY FAN CFM MED	SUPPLY FAN CFM LOW	ELECTRICAL
AC-1A & AC-2A	3 TON	CARRIER	FB4CNF036 000	FAN COIL	3/8"ø	7/8"ø		1200		208 VAC/1ø - 5.4 AMP
AC-1B & AC-2B	4 TON	CARRIER	FB4CNF048 000	FAN COIL	3/8"ø	7/8"ø		1600		208 VAC/1ø - 7.2 AMP
CU-1A & CU-2A	3 TONS	CARRIER	25HHA4-36	CON.UNIT	3/8"ø	7/8"ø	-	-	-	208 VAC/3ø - 20 AMP
CU-1B & CU-2B	4 TON	CARRIER	25HHA4-48	CON.UNIT	3/8"ø	7/8"ø	-	-	-	208 VAC/3ø - 30 AMP

DESIGN NOTES

1. SINGLE STAGE COMPRESSOR, R-410A REFRIGERANT. LOW AMBIENT OPERATION (DOWN TO -18 DEG. C.), WALL MOUNTED SLIM REMOTE THERMOSTAT. CONDENSATE DRAIN TO OUTDOORS COMPLETE WITH ELECTRIC HEAT TRACE CABLE.
2. PROVIDE CONDENSATE DRAIN LINE C/W CONDENSATE PUMP AND P-TRAP. CONNECT TO DRAIN PIPE.
3. PROVIDE FACTORY WINDSCREEN.
4. HVAC SYSTEMS SHALL BE INTERLOCK AND CONTROLLED WITH FLOOR HYDRONIC HEATING SYSTEM (TYPICAL)..

HEAT RECOVERY VENTILATOR SCHEDULE

EQUIPMENT TAG	SERVICE	L/s @ S.P.	MOTOR WATTS	MOTOR RPM	MOTOR VOLT.-PH.-CY.	EAT	LAT	MANUFACTURER & MODEL	ACCESSORIES
HRV-1 HRV-2	1st & 2nd FLOOR OFFICES	95 @ 100 Pa	325	1625	120/1/60	-25 DEG. C.	10.0 DEG. C.	LIFEBREATH Model 'RNC205'	C/W FILTERS AND CONTROLS
HRV-3	WAREHOUSE	250 @ 100 Pa	912	1625	120/1/60	-25 DEG. C.	10.0 DEG. C.	LIFEBREATH Model '650DD'	C/W FILTERS AND CONTROLS

NOTES:
1. PERFORMANCE BASED ON 21 DEG. C. ROOM AIR TEMPERATURE.
2. COMPLETE WITH VIBRATION ISOLATION.
3. CO-ORDINATE WITH ELECTRICAL TRADE.
4. CONTROLS: LIFESTYLE 'MAX' DIGITAL CONTROL TIMER Model '99-DXPL02'.
5. PROVIDE CONDENSATE DRAIN LINE C/W CONDENSATE PUMP AND P-TRAP. CONNECT TO DRAIN PIPE.
6. PROVIDE DUCT HEATING COIL 1KW for HRV-1 & Hrv-2 THERMO-AIR M# TER-6-1120 C/W SCR CONTROLLER & AIR FLOW SENSOR, HEATING COIL TO BE INTERLOCK WITH UNIT.

MECHANICAL DRAWING NOTES:

1. PROVIDE CEILING MOUNTED HEAT RECOVERY UNIT REFER TO SCHEDULE FOR SPECIFICATIONS AND DETAILS. PROVIDE HRV DRAIN AND HANGERS WITH VIBRATION ISOLATORS. INSTALL UNIT AS PER MANUFACTURER INSTRUCTIONS (TYPICAL OF 3).
2. PROVIDE RETURN AIR DUCTWORK C/W RETURN AIR VANES AND ACOUSTIC INSULATION. PROVIDE ALL REQUIRED DUCT HANGERS AND SUPPORTS AS PER "SMACNA" STANDARDS (TYPICAL OF ALL).
3. PROVIDE EXTERIOR WALL MOUNTED CONDENSING UNITS REFER TO SCHEDULE FOR SPECIFICATIONS AND DETAILS. PROVIDE ALL HANGERS AND SUPPORTS AS PER MANUFACTURER RECOMMENDATIONS (TYPICAL OF 4).
4. PROVIDE EXTERIOR EXHAUST DUCT WALL CAPS C/W BACK DRAFT DAMPER AND BIRD SCREEN. DUCTWORK TO BE INSULATED WITH 25mm THICK RIGID THERMAL INSULATIONS MIN. 5m FROM EXTERIOR WALL (TYPICAL FOR ALL).
5. PROVIDE SPRINKLER HEADS; UPRIGHT TYPE FOR OPEN CEILINGS AND PENDENT FOR DRYWALL OR T BAR CEILINGS. ALL WORK SHALL COMPLY WITH "NFPA 13" (TYPICAL FOR ALL).
6. PROVIDE WASHROOM CABINET CEILING FANS "EF-1" REFER TO SCHEDULE FOR SPECIFICATIONS AND DETAILS. THE FAN TO BE CONTROLLED BY LIGHT SWITCH (TYPICAL).
7. PROVIDE FINISHED SURFACE FLOOR "FD-1" REFER TO SPECIFICATIONS. PROVIDE TRAP SEAL PRIMER FROM NEAREST PLUMBING FIXTURE (TYPICAL FOR ALL).
8. PROVIDE CEILING MOUNTED FAN COIL UNIT REFER TO SCHEDULE FOR SPECIFICATIONS AND DETAILS. PROVIDE FAN COIL DRAIN AND HANGERS WITH VIBRATION ISOLATORS. INSTALL UNIT AND RELATED REFRIGERATION PIPING BETWEEN UNIT AND CONDENSERS AS PER MANUFACTURER INSTRUCTIONS (TYPICAL OF 4).
9. PROVIDE WALL MOUNTED DRY CHEMICAL FIRE EXTINGUISHER TYPE "ABC" 5lb CAPACITY C/W INSTALLATION WALL BRACKETS (TYPICAL FOR ALL).
10. PROVIDE CEILING MOUNTED RETURN AIR GILLES REFER TO GRILLE SCHEDULE FOR DETAILS (TYPICAL FOR ALL).
11. PROVIDE BRANCH RIGID SPIRAL DUCT AND MAIN TRUNK DUCTWORK COMPLETE WITH ALL BALANCING DAMPERS. PROVIDE ALL DUCT HANGERS AND SUPPORT AS PER "SMACNA" STANDARDS (TYPICAL FOR ALL).
12. PROVIDE CEILING MOUNTED SUPPLY AIR GILLES REFER TO GRILLE SCHEDULE FOR DETAILS. BALANCE AIR FLOW AS SHOWN (TYPICAL FOR ALL).
13. PROVIDE ALL PLUMBING FIXTURES AS SHOWN ON PLUMBING SCHEDULE. ALL FIXTURES TO BE INSTALLED WITH SHUT-OFF VALVES (TYPICAL FOR ALL).
14. ALL OFFICE FAN COIL UNITS TO BE CONTROLLED BY WALL MOUNTED PROGRAMMABLE THERMOSTAT 7 DAY/24Hr. ALL UNITS SHALL BE INTERLOCKED WITH FLOOR HEATING SYSTEM (TYPICAL FOR ALL).
15. ALL DOMESTIC COLD AND HOT WATER PIPING SHALL BE THERMALLY INSULATED WITH 25mm THICK RIGID INSULATIONS. PROVIDE PIPING HANGERS AND SUPPORTS AS PER PLUMBING CODE (TYPICAL FOR ALL).
16. PROVIDE FLOOR MOUNTED ELECTRIC DOMESTIC HOT WATER TANK "HWT-3" EQUAL TO "RHEEM" MO. PRO+E3012RH95 EC1. 30 GALLONS CAPACITY, 2X4.5KW HEATER FLIP-FLOP TYPE, 208V, 1ø, 60Hz, FOR INSTALLATION REFER TO DETAIL DRAWING M-7.

Antares Engineering Group Inc.
Professional Mechanical, Electrical, Testing and Research Engineers
38 Sachs Forest Place, Ottawa, Ontario, K2E 7J4
Phone (613) 723-6034; e-mail: mail@antaresengineering.ca

NO.	DESCRIPTION	
3.	ISSUED FOR TENDER	15/01/2021
2.	TENDER FOR PRE-GENG. BUILDING STRUCTURE + ONLY	14/12/2020
1.	ISSUED FOR CLIENT REVIEW	15/11/2020

REVISIONS

CONTRACTOR SHALL CHECK AND VERIFY ALL DIMENSIONS AND REPORT ANY OMISSIONS OR DISCREPANCIES TO THE ENGINEER BEFORE PROCEEDING WITH THE WORK

DO NOT SCALE DRAWINGS

THIS DRAWING SHALL NOT BE USED FOR CONSTRUCTION PURPOSES UNTIL SIGNED BY THE ENGINEER

DATE JYLY 2020

DRAWN S.S.

DATE JULY 2020

CHECKED J.C.J.

ISSUED 15 JULY 2020

CONSULTANT

CONSULTANT

S.J. LAWRENCE ARCHITECTURAL I n c.
18 DEAKING STREET SUITE 205 NEPEAN, ,ONTARIO K2E 8B7
TEL (613) 739 7770 e-mail; brandon@sjarchitect.com

PROJECT

CITYSCAPE COMMERCIAL WAREHOUSE

144 BENTLEY AVENUE OTTAWA,ONTARIO

DRAWING

MECHANICAL
HVAC DISTRIBUTION LAYOUT

SCALE AS SHOWN

SHEET M-3

PROJ. NO. AEG 20-727

REV.

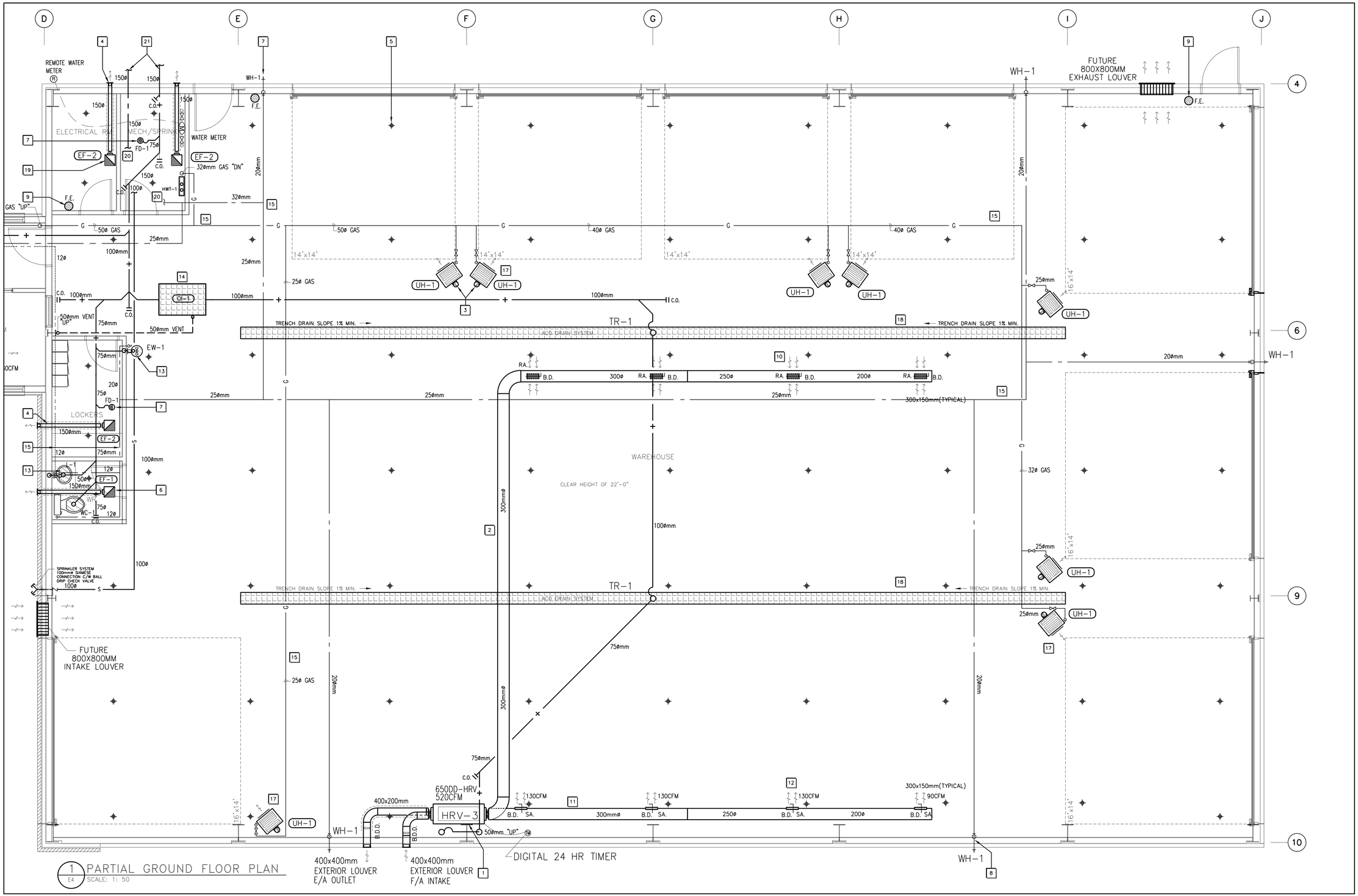

1 PARTIAL GROUND FLOOR PLAN
E4 SCALE: 1: 50

MECHANICAL DRAWING NOTES:

1. PROVIDE CEILING MOUNTED HEAT RECOVERY UNIT REFER TO SCHEDULE FOR SPECIFICATIONS AND DETAILS. PROVIDE HRV DRAIN AND HANGERS WITH VIBRATION ISOLATORS. INSTALL UNIT AS PER MANUFACTURER INSTRUCTIONS (TYPICAL OF 3).
2. PROVIDE RETURN AIR DUCTWORK FOR HRV-3. PROVIDE ALL REQUIRED DUCT HANGERS AND SUPPORTS AS PER "SMACNA" STANDARDS (TYPICAL OF ALL).
3. PROVIDE BY MANUFACTURE VERTICAL CONCENTRIC VENT KIT THRU ROOF C/W INLET TERMINAL & VENT CAP (TYPICAL OF 8).
4. PROVIDE EXTERIOR EXHAUST DUCT WALL CAPS C/W BACK DRAFT DAMPER AND BIRD SCREEN. DUCTWORK TO BE INSULATED WITH 25mm THICK RIGID THERMAL INSULATIONS MIN. 5m FROM EXTERIOR WALL (TYPICAL FOR ALL).
5. PROVIDE DRY PIPE SYSTEM SPRINKLER HEADS; UPRIGHT TYPE FOR OPEN WAREHOUSE CEILING. ALL WORK SHALL COMPLY WITH "NFPA 13" (TYPICAL FOR ALL).
6. PROVIDE WASHROOM CABINET CEILING FANS "EF-1" REFER TO SCHEDULE FOR SPECIFICATIONS AND DETAILS. THE FAN TO BE CONTROLLED BY LIGHT SWITCH (TYPICAL).
7. PROVIDE FINISHED SURFACE FLOOR "FD-1" REFER TO SPECIFICATIONS. PROVIDE TRAP SEAL PRIMER FROM NEAREST PLUMBING FIXTURE (TYPICAL FOR ALL).
8. PROVIDE WALL MOUNTED NON FREEZE EXTERIOR HYDRANT "WH-1" C/W VACUUM BREAKER REFER TO SPECIFICATIONS. ALL WORK SHALL COMPLY WITH PLUMBING CODE. (TYPICAL AS SHOWN).
9. PROVIDE WALL MOUNTED DRY CHEMICAL FIRE EXTINGUISHER TYPE "ABC" 5lb CAPACITY C/W INSTALLATION WALL BRACKETS (TYPICAL FOR ALL).
10. PROVIDE DUCT MOUNTED RETURN AIR GILLES REFER TO GRILLE SCHEDULE FOR DETAILS (TYPICAL FOR ALL).
11. PROVIDE AIR SUPPLY "HRV" DUCTWORK COMPLETE WITH ALL DUCT HANGERS AND SUPPORT AS PER "SMACNA" STANDARDS (TYPICAL FOR ALL).
12. PROVIDE DUCT MOUNTED SUPPLY AIR GRILLES REFER TO GRILLE SCHEDULE FOR DETAILS. BALANCE AIR FLOW AS SHOWN (TYPICAL FOR ALL).
13. PROVIDE ALL PLUMBING FIXTURES AS SHOWN ON PLUMBING SCHEDULE. ALL FIXTURES TO BE INSTALLED WITH SHUT-OFF VALVES (TYPICAL FOR ALL).
14 PROVIDE FLOOR MOUNTED OIL/SEDIMENT INTERCEPTOR "OI-1" REFER TO PLUMBING FIXTURE SCHEDULE FOR DETAIL INFORMATION. PROVIDE DRAINAGE AND VENT PIPING AS PER MANUFACTURER GUIDE LINES AND PLUMBING CODE.
15. ALL DOMESTIC COLD AND HOT WATER PIPING SHALL BE THERMALLY INSULATED WITH 25mm THICK RIGID INSULATIONS. PROVIDE PIPING HANGERS AND SUPPORTS AS PER PLUMBING CODE (TYPICAL FOR ALL).
16. PROVIDE NATURAL GAS PIPING RUN AT CEILING LEVEL FOR ALL GAS EQUIPMENT. PROVIDE ALL PIPING SUPPORTS AND HANGERS AS PER GAS CODE (TYPICAL).
17. PROVIDE CEILING MOUNTED GAS UNIT HEATERS "UH-1" REFER TO SCHEDULE FOR SPECS AND DETAILS. PROVIDE HANGERS WITH VIBRATION ISOLATORS. INSTALL UNIT AS PER MANUFACTURER INSTRUCTIONS (TYPICAL OF 8).
18. PROVIDE FLOOR MOUNTED TRENCH DRAIN "TR-1" REFER TO SPECIFICATIONS. INSTALL UNIT AS PER MANUFACTURER INSTRUCTIONS (TYPICAL OF 2).
19. PROVIDE SERVICE ROOM CABINET CEILING FANS "EF-2" REFER TO SCHEDULE FOR SPECIFICATIONS AND DETAILS. THE FAN TO BE CONTROLLED BY LIGHT SWITCH (TYPICAL AS SHOWN).
20. FOR LAYOUT OF WATER SERVICE AND RELATED EQUIPMENT REFER TO "MAIN WATER ENTRY SCHEMATIC" ON DRAWING M-5.
21. FOR SANITARY AND WATER SERVICE PIPE SIZES, PIPING INVERTS AND EXTERIOR PIPES CONTINUATIONS REFER TO CIVIL DRAWINGS.

Antares Engineering Group Inc.
Professional Mechanical, Electrical, Testing and Research Engineers
38 Sachs Forest Place, Ottawa, Ontario, K2E 7J4
Phone (613) 723-6034; e-mail: mail@antaresengineering.ca

NO.	DESCRIPTION	
3.	ISSUED FOR TENDER	15/01/2021
2.	TENDER FOR PRE-ENG. BUILDING STRUCTURE - ONLY	14/12/2020
1.	ISSUED FOR CLIENT REVIEW	15/11/2020

REVISIONS

CONTRACTOR SHALL CHECK AND VERIFY ALL DIMENSIONS AND REPORT ANY OMISSIONS OR DISCREPANCIES TO THE ENGINEER BEFORE PROCEEDING WITH THE WORK

DO NOT SCALE DRAWINGS

THIS DRAWING SHALL NOT BE USED FOR CONSTRUCTION PURPOSES UNTIL SIGNED BY THE ENGINEER

DATE JYLY 2020

DRAWN S.S.

DATE JULY 2020

CHECKED J.C.J.

ISSUED 15 JULY 2020

CONSULTANT

CONSULTANT

S.J. LAWRENCE ARCHITECTURAL I n c.
18 DEAKING STREET SUITE 205 NEPEAN, ,ONTARIO K2E 8B7
TEL (613) 739 7770 e-mail: brandon@sjarchitect.com

PROJECT

CITYSCAPE COMMERCIAL WAREHOUSE

144 BENTLEY AVENUE OTTAWA,ONTARIO

DRAWING

MECHANICAL
HVAC, PLUMBING AND SPRINKLER LAYOUT

SCALE AS SHOWN

PROJ. NO. AEG 20-727

SHEET M-4

REV.

GENERAL MECHANICAL DRAWING NOTE:

A. FOR ALL MECHANICAL DRAWING NOTES RELATED TO SECOND OFFICE FLOOR LAYOUT REFER TO DRAWING NOTES FOR FIRST OFFICE FLOOR SHOWN ON DRAWING M-3.

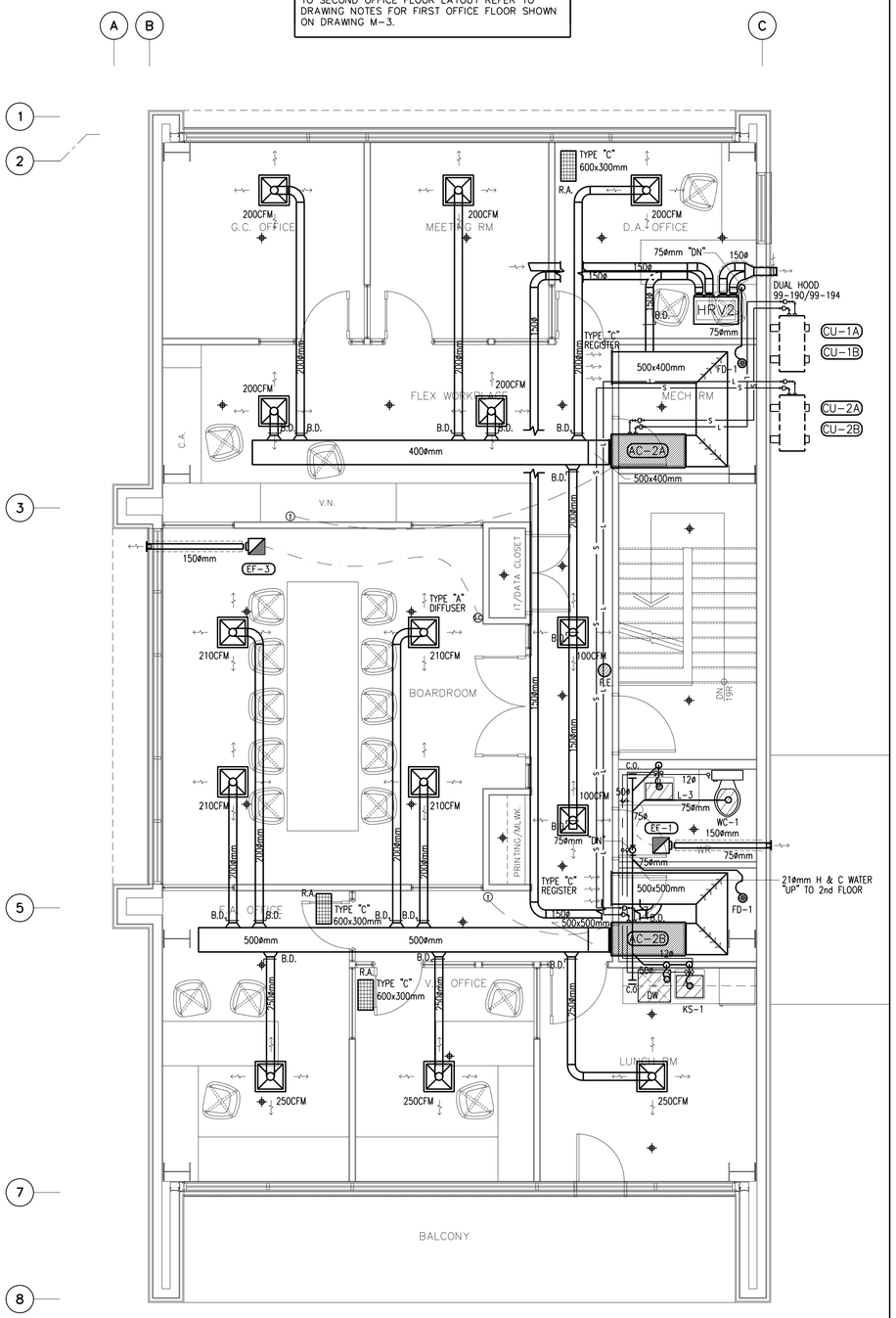

1 M5 SECOND FLOOR PLAN
SCALE: 1: 50

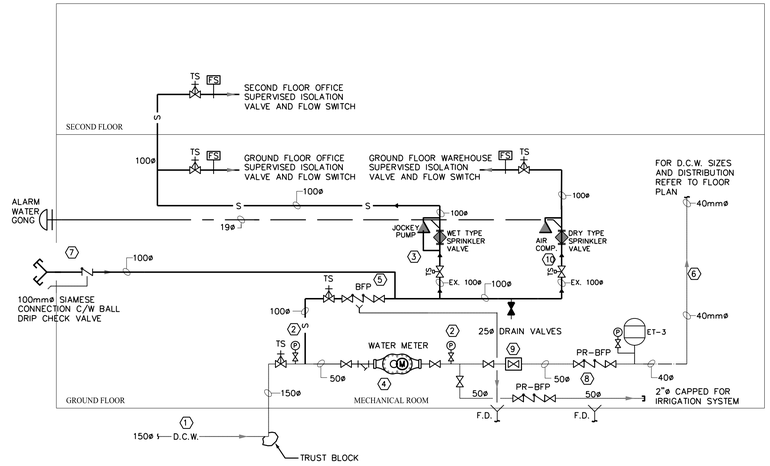

2 M1 INCOMING WATER ENTRY SCHEMATIC – MECHANICAL ROOM
SCALE: N.T.S

DRAWING NOTES

1. INCOMING 150mmø UNDERGROUND WATER SERVICE TO BUILDING. REFER TO CIVIL AND MECHANICAL PLANS FOR EXACT LOCATION.
2. PRESSURE GUAGE.
3. WET TYPE SPRINKLER VALVE SERVING OFFICES AREA 1ST AND 2ND FLOOR
4. DOMESTIC SERVICE WATER METER. ENSURE METER IS INSTALLED WITH A MINIMUM UNOBSTRUCTED STRAIGHT RUN OF 1500mm
5. REDUCED PRESSURE TYPE BACKFLOW PREVENTER (BFP) SPRINKLER LINE C/W RELIEF DRAIN PIPED TO FLOOR DRAIN.
6. DOMESTIC COLD WATER LINE TO SERVE DOMESTIC WATER SYSTEM. REFER TO PLANS FOR LOCATION AND ROUTING.
7. SIAMESE FIRE DEPARTMENT CONNECTION.
8. REDUCED PRESSURE TYPE BACKFLOW PREVENTER (BFP) D.C.W. LINE C/W RELIEF DRAIN PIPED TO FLOOR DRAIN.
9. H2MINUS 0 FLOW MANAGEMENT VALVE.
10. DRY TYPE SPRINKLER VALVE SERVING WAREHOUSE AREA

EXPANSION TANK SCHEDULE

TAG NO.	MANUFACTURER	MODEL	SYSTEM	FLUID	TOTAL VOL.	ACCEPT. VOL.	DIAMETER	HEIGHT	CONNECTION	COMMENTS
ET-1	EXTROL	ST-12C	WAREHOUSE HEATING	WATER	24.0L	12.2L	350 mm	357mm	19mm	PIPE MOUNTED SUPPORTS AS REQUIRED
ET-2	EXTROL	ST-12C	OFFICE 1ST & 2ND FLR.	WATER	24.0L	12.2L	350 mm	357mm	19mm	PIPE MOUNTED SUPPORTS AS REQUIRED
ET-3	EXTROL	ST-5C	DOMESTIC WATER ENTRY DOMESTIC HOT WATER	WATER	9.0 L	5.1 L	250mm	250mm	19mm	PIPE MOUNTED SUPPORTS AS REQUIRED

PLUMBING FIXTURE SCHEDULE

FIX. REF.	FIXTURE	HOT WATER	COLD WATER	DIR. DRAIN	VENT	REMARKS
WC-1	WATER CLOSET (F.V.)	–	1/2"	3"	1-1/2"	FLOOR MOUNTED WATER CLOSET, ELONGATED FLOOR BOWL, "ZURN" M#Z5655-BWL1 C/W ZTR626200-ONE-ALL HIGH EFFICIENCY FLUSHOMETER VALVE 1.1 GALLONS PER FLUSH
WC-2	WATER CLOSET (F.V.)	–	1/2"	3"	1-1/2"	FLOOR MOUNTED WATER CLOSET, BARRIER FREE TYPE, "ZURN" M#Z5665-BWL1 C/W ZTR626200-ONE-ALL HIGH EFFICIENCY FLUSHOMETER VALVE 1.1 GALLONS PER FLUSH
L-1	LAVATORY	1/2"	1/2"	1-1/4"	1-1/4"	COUNTER TOP MOUNTED LAVATORY VITREOUS CHINA LAVATORY, "KOHLER" BISCUIT M # K-2210-96 C/W SINGLE LEVER FAUCET "KOHLER' ALTEO M #K-45800-4-CP
L-2	LAVATORY	1/2"	1/2"	1-1/4"	1-1/4"	WALL MOUNTED, BARRIER FREE, VITREOUS CHINA WASHROOM LAVATORY "AMERICAN STANDARDS" MEZZO SEMI COUNTERTOP C/W A.S. FAUCET# 6540278.002 MONTERREY WIDESPRED COMMERCIAL TYPE
L-3	LAVATORY	1/2"	1/2"	1-1/4"	1-1/4"	COUNTER TOP DROP IN MOUNTED LAVATORY RETANGULAR, VITREOUS CHINA, "KOHLER" M # K-2885-1 C/W SINGLE LEVER FAUCET "KOHLER' ALTEO M #K-45800-4-CP
KS-1	KITCHEN SINK	1/2"	1/2"	1-1/2"	1-1/4"	SINGLE BOWL COUNTER TOP TYPE, STAINLESS STEEL COMPARTMENT, "KOHLER" M# K-3362-1-NA C/W "KOHLER" FAUCET CORALAIS M# K-15160
JS-1	JANITORS SLOP SINK	1/2"	1/2"	3"	1-1/2"	FLOOR MOUNTED JANITOR MOP SINK FIAT 'MS-2424' C/W WALL MOUNTED "KOHLER" FAUCET KINLOCK M# K-8907 .
WH-1	WALL HYDRANT	–	3/4"	–	–	NON FREEZE WALL HYDRANT WITH NICKEL BRONZE BOX AND DOOR CHROME PLATED FACE, INTEGRAL VACUUM BREAKER. WATTS Model 'HY-725'.
OI-1	OIL INTERCEPTOR	–	–	4"	2"	LARGE CAPACITY ACID RESISTANT OIL INTERCEPTOR C/W SEDIMENT BUCKET AND 2" VENT CONNECTION EQUAL TO "ZURN" MODEL # Z1188-E-HD-KC, 200GPM FLOW RATE, 4" INLET/OUTLET DRAIN SIZE.
EW-1	EMERGENCY EYE WASH	–	1"	2"	1-1/4"	EMERGENCY STATION EYE WASH STATION, WALL MOUNTED, YELLOW, EQUAL TO "SPEAKMAN" M# SE-580, ABS PLASTIC BOWL TYPE C/W PUSH HANDLE ACTIVATION

PIPING MATERIALS/INSULATION SCHEDULE

Service	Service Abbr.	Material	Connection Type	Oper. Temp	Max Temp (F)	Max Press (psig)	Test Press (psig)	Location	Insulation	Jacket	Insulation Thickness	Remarks
Natural Gas	G	Carbon Steel	Thread/Buttweld	75	80	0 – 1	3	Indoor, Outdoor	NONE	N/A	–	PERFORM ALL WORK TO NATURAL GAS CODE.
Sanitary Waste	—	Copper/Cast Iron	Solder/M.J.	40 – 110	140	0	10 FT. HD.	Indoor	NONE	N/A	–	–
Sanitary Vent	—	Copper/Cast Iron	Solder/M.J.	40 – 110	140	0	10 FT. HD.	Indoor	NONE	N/A	–	–
Domestic Water	—	Copper	Solder	40	70	80	120	Indoor	Fiberglass	YES	1"	–
Domestic Hot Water	—	Copper	Solder	110	140	80	120	Indoor	Fiberglass	YES	1"	–
Sanitary Waste (buried)	—	Plastic	Plastic Weld	40 – 110	140	0	10 FT. HD.	Indoor	NONE	N/A	–	
Storm Water	—	Cast Iron	M.J. (Mech. Joint)	40 – 110	140	0	10 FT. HD.	Indoor	NONE	N/A	–	INSULATE BACK FROM ROOF MIN. 20 FEET
Condensate	—	Copper	Solder	40 – 110	140	0	10 FT. HD.	Indoor	Fiberglass	YES	1"	–

Antares Engineering Group Inc.
Professional Mechanical, Electrical, Testing and Research Engineers
38 Sachs Forest Place, Ottawa, Ontario, K2E 7J4
Phone (613) 723-6034; e-mail: mail@antaresengineering.ca

NO.	DESCRIPTION	
3.	ISSUED FOR TENDER	15/01/2021
2.	TENDER FOR PRE-ENG. BUILDING STRUCTURE - ONLY	14/12/2020
1.	ISSUED FOR CLIENT REVIEW	15/11/2020

REVISIONS

CONTRACTOR SHALL CHECK AND VERIFY ALL DIMENSIONS AND REPORT ANY OMISSIONS OR DISCREPANCIES TO THE ENGINEER BEFORE PROCEEDING WITH THE WORK

DO NOT SCALE DRAWINGS

THIS DRAWING SHALL NOT BE USED FOR CONSTRUCTION PURPOSES UNTIL SIGNED BY THE ENGINEER

DATE JYLY 2020

DRAWN S.S.

DATE JULY 2020

CHECKED J.C.J.

ISSUED 15 JULY 2020

CONSULTANT

CONSULTANT

S.J. LAWRENCE ARCHITECTURAL I n c.
18 DEAKING STREET SUITE 205 NEPEAN, ,ONTARIO K2E 8B7
TEL (613) 739 7770 e-mail; brandon@sjarchitect.com

PROJECT

CITYSCAPE COMMERCIAL WAREHOUSE

144 BENTLEY AVENUE OTTAWA,ONTARIO

DRAWING

MECHANICAL DISTRIBUTION LAYOUT

SCALE AS SHOWN

PROJ. NO. AEG 20-727

SHEET M-5

REV.

EYE WASH STATION SHALL BE INSTALLED IN COMPLIANCE WITH ANSI Z358.1.
PROVIDE MIXING VALVE FOR TEPID WATER SUPPLY (60-100 DEG F).

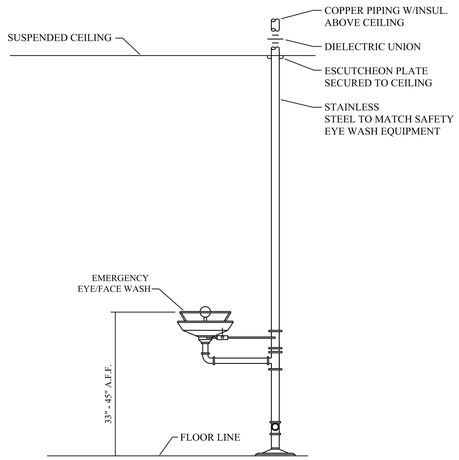

EMERGENCY EYEWASH STATION DETAIL

N.T.S.

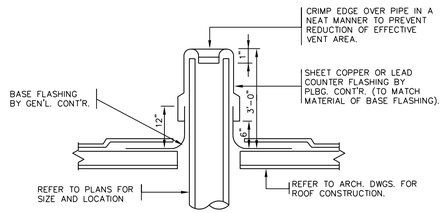

PLUMBING VENT THROUGH ROOF TYPICAL DETAIL

N.T.S.

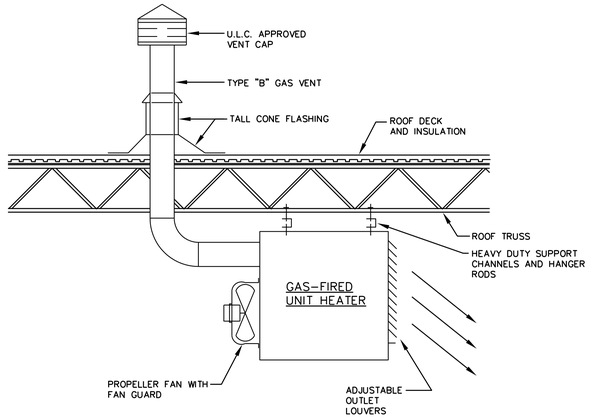

GAS FIRED UNIT HEATER DETAIL

N.T.S.

NOTE:
PROVIDE SEISMIC RESTRAINTS FOR PIPING AS FOLLOWS:
- 1" & 1-1/2" PIPES: 20 FT. ON CENTER
- 2" & 2-1/2" PIPES: 30 FT. ON CENTER
- 3" , 4" & 6" PIPES: 40 FT. ON CENTER

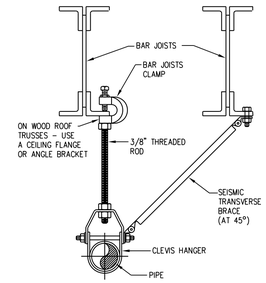

PIPE SUPPORT AND SEISMIC RESTRAINT TYPICAL DETAIL- HORIZONTAL PIPING

N.T.S.

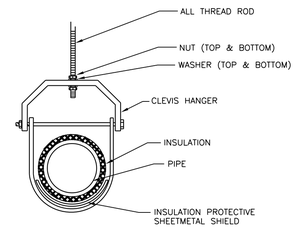

TYPICAL CLEVIS PIPE HANGER DETAIL

N.T.S.

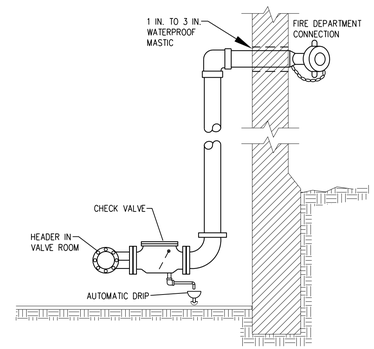

FIRE DEPARTMENT CONNECTION

NOT TO SCALE

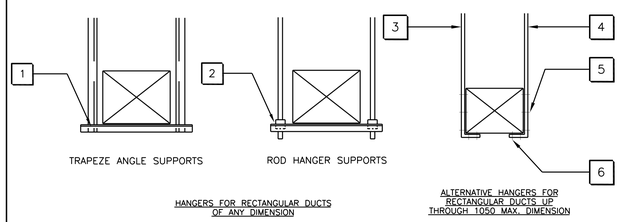

DRAWING NOTES:

1. BOLT OR WELD.
2. NUTS AND BOLTS.
3. 3048 MAX. ON CENTRES.
4. STRAP HANGERS.
5. SHEET METAL SCREWS AT 200mm MAX. CENTRES.
6. TWO SHEET METAL SCREWS.

HANGERS FOR HORIZONTAL RETANGULAR DUCTS

NOT TO SCALE

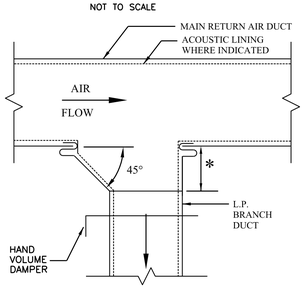

*-EQUALS WIDTH OF BRANCH DUCT UP TO 12".
12" FOR ALL BRANCH DUCTS LARGER THAN 12".

TYPICAL SUPPLY AIR BRANCH DUCT TAKE-OFF

NOT TO SCALE

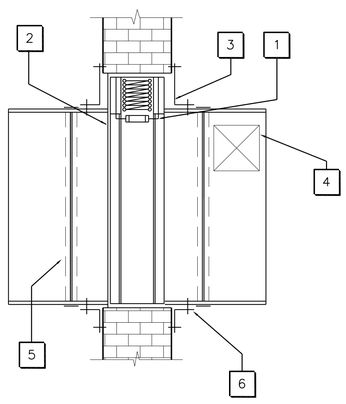

DRAWING NOTES:

1. FUSIBLE LINK
2. FIRE DAMPER
3. MINIMUM 50X100-14 GA. RETAINING ANGLES.
4. ACCESS DOOR
5. DUCT BREAKAWAY
6. MINIMUM 50X50-14 GA. RETAINING ANGLES ALL AROUND DUCT.

FIRE DAMPER TYPICAL MOUNTING DETAIL CROSS SECTION

N.T.S.

LEGEND

1. 6" UNDERGROUND LEAD IN
2. 6" VIC FLG., 6" VIC CHK. #717, 6x6x6 VIC TEE ON BULLHD., 6" VIC 90 ELL
3. 6 x 4 VIC #750 RED. CPLG.
4. 4" GxG VIC BUTTERFLY VA. w/ TAMPER SWITCH
5. 6x4 VIC MECH. TEE w/ GRV FOR 4" FDC
6. 4" x 0-6 GxG PC. BELOW DPV & GxG CHK. VA.
7. 4" "FIREMATIC" MODEL D FxF DRY PIPE VALVE COMPLETE w/ TRIM, GAGES, & DRAIN.
8. 4" "CENTRAL" MODEL # 90 G x G SWING CHECK VALVE
9. 2 1/2 x 2 1/2 x 4 SIAMESE FDC w/ NST
10. 1/2" AUTOMATIC BALL DRIP & ST. ELL
11. 1/2" AIR SUPPLY TO DPV PER NFPA # 13 3-2.6.5
12. J7X ELECTRIC WATER PRESSURE SWITCH
13. OUTSIDE ELECTRIC BELL
14. WATER MOTOR ALARM

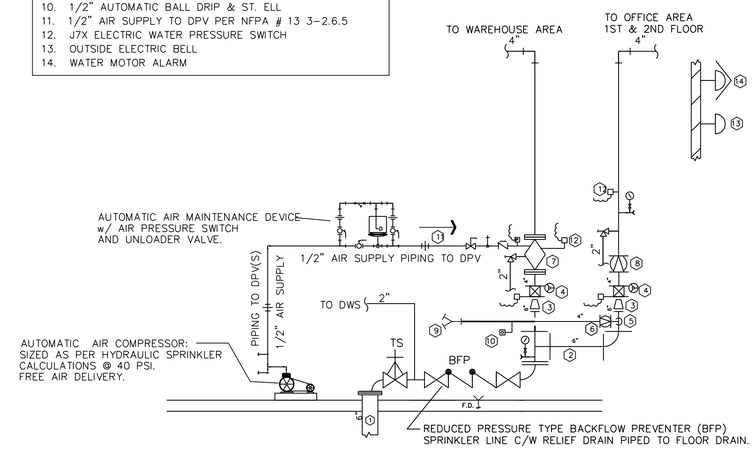

SPRINKLER SYSTEM RISER DIAGRAM - WET & DRY VALVE

NOT TO SCALE

Antares Engineering Group Inc.
Professional Mechanical, Electrical, Testing and Research Engineers
38 Sachs Forest Place, Ottawa, Ontario, K2E 7J4
Phone (613) 723-6034; e-mail: mail@antaresengineering.ca

NO.	DESCRIPTION	
3.	ISSUED FOR TENDER	15/01/2021
2.	TENDER FOR PRE-ENG. BUILDING STRUCTURE - ONLY	14/12/2020
1.	ISSUED FOR CLIENT REVIEW	15/11/2020

REVISIONS

CONTRACTOR SHALL CHECK AND VERIFY ALL DIMENSIONS AND REPORT ANY OMISSIONS OR DISCREPANCIES TO THE ENGINEER BEFORE PROCEEDING WITH THE WORK

DO NOT SCALE DRAWINGS

THIS DRAWING SHALL NOT BE USED FOR CONSTRUCTION PURPOSES UNTIL SIGNED BY THE ENGINEER

DATE JYLY 2020

DRAWN S.S.

DATE JULY 2020

CHECKED J.C.J.

ISSUED 15 JULY 2020

CONSULTANT

CONSULTANT

S.J. LAWRENCE ARCHITECTURAL I n c.
18 DEAKING STREET SUITE 205 NEPEAN, ,ONTARIO K2E 8B7
TEL (613) 739 7770 e-mail; brandon@sjarchitect.com

PROJECT

CITYSCAPE COMMERCIAL WAREHOUSE

144 BENTLEY AVENUE OTTAWA,ONTARIO

DRAWING

MECHANICAL
SCHEMATIC AND DETAILS

SCALE AS SHOWN

PROJ. NO. AEG 20-727

SHEET M-6

REV.

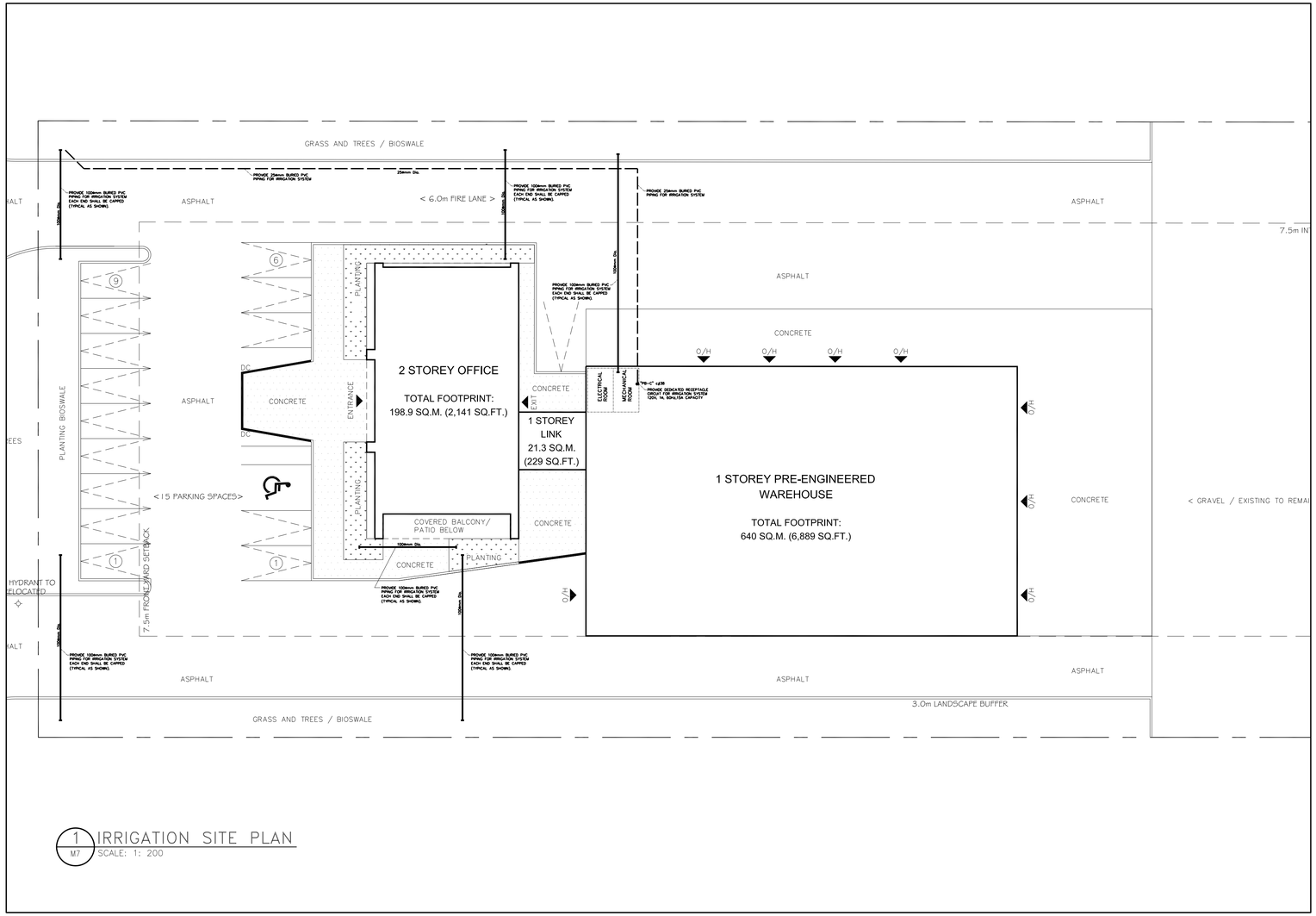

1 IRRIGATION SITE PLAN
M7 SCALE: 1: 200

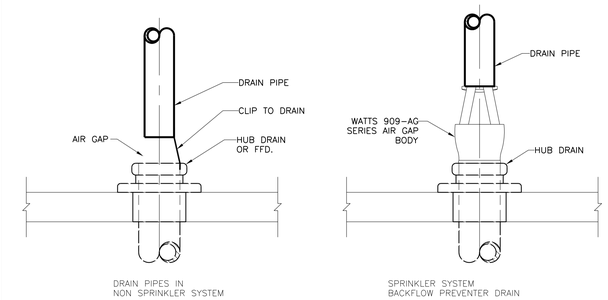

PIPES TO OPEN DRANS

NOT TO SCALE

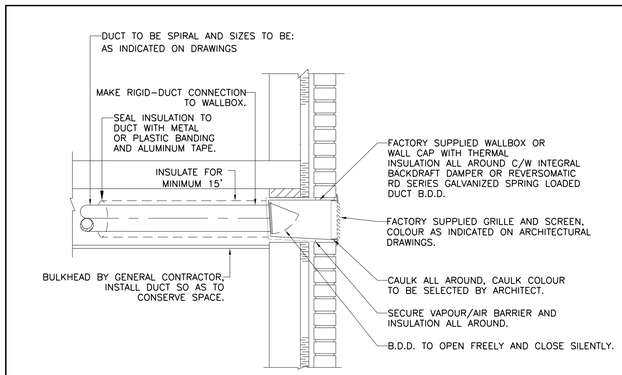

WALL BOX OR WALL CAP INSTALLATION DETAIL

NOT TO SCALE

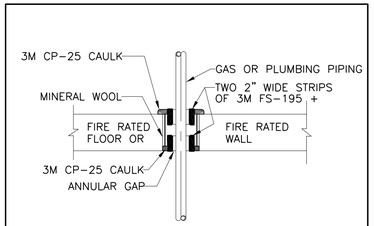

PIPING FIRE STOPPING

NOT TO SCALE

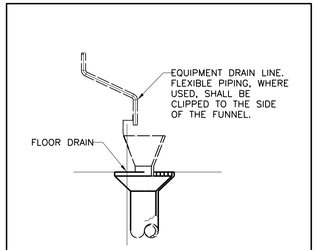

FFD AND HD CONNECTIONS

NOT TO SCALE

DIFFUSER AND GRILLE SCHEDULE

REF	TYPE	CFM	SIZE	MAKE&MODEL	REMARKS
TYPE: "A & B"	SUPPLY AIR DIFFUSER	<250	24"x24", 10" DIA. NECK	EH PRICE SCDA OR EQUAL	AS SHOWN ON DRWGS
		<150≤250	24"x24", 8" DIA. NECK		
		<100≤150	24"x24", 6" DIA. NECK		
		≤100	12"x12", 4" DIA. NECK		
TYPE:"C"	RETURN AIR GRILLE	–	24"x24" 24"x12" 18"x18"	EH PRICE SERIES 80 OR EQUAL	"EGG CRATE" STYLE RETURN AIR GRILLE, ALUMINUM. LAY-IN TO T-BAR OR FRAME FOR DRYWALL AS NECESSARY.
TYPE:"D"	DOUBLE DEFLECTION SUPPLY AIR GRILLE	AS INDICATED	14"X5" HRV WAREHOUSE SUPPLY AIR GRILLE (TYPICAL)	EH PRICE "ARDR" SERIES OR EQUAL	SET BLADES TO 22.5DEG. AIR SUPPLY LOUVERS
TYPE:"E"	FACE RETURN AIR GRILLE	AS INDICATED	14"X5" HRV WAREHOUSE RETURN AIR GRILLE (TYPICAL)	EH PRICE 635 SERIES OR EQUAL	AIR RETURN LOUVERS

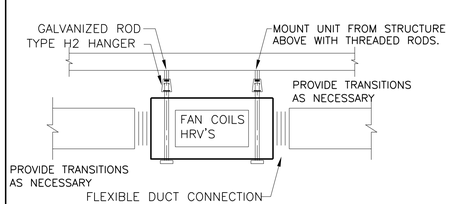

PROVIDE SEISMIC RESTRAINT
AS PER SPECIFICATIONS

CEILING MOUNTED HVAC EQUIPMENT DETAIL TYPICAL FOR ALL FAN COILS & HRV'S UNITS

NOT TO SCALE

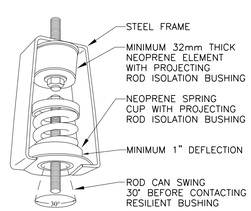

SPRING HANGERS TYPE H2 DETAIL

NOT TO SCALE

NOTE: ALL PIPING SHOWN IS DIAGRAMMATIC ONLY. ALL PIPING SHALL BE ROUTED IN FIELD TO MEET ACTUAL CONDITIONS.

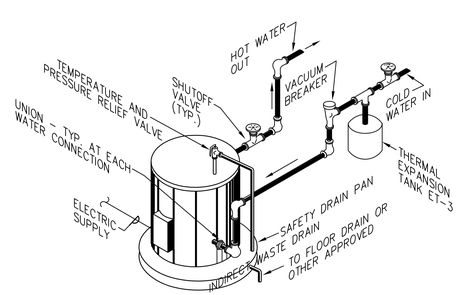

FLOOR MOUNTED ELECTRIC WATER HEATER HWT-3 DETAIL

NOT TO SCALE

Antares Engineering Group Inc.
Professional Mechanical, Electrical, Testing and Research Engineers
38 Sachs Forest Place, Ottawa, Ontario, K2E 7J4
Phone (613) 723-6034; e-mail: mail@antaresengineering.ca

NO.	DESCRIPTION	
3.	ISSUED FOR TENDER	15/01/2021
2.	TENDER FOR PRE-ENG. BUILDING STRUCTURE -ONLY	14/12/2020
1.	ISSUED FOR CLIENT REVIEW	15/11/2020

REVISIONS

CONTRACTOR SHALL CHECK AND VERIFY ALL DIMENSIONS AND REPORT ANY OMISSIONS OR DISCREPANCIES TO THE ENGINEER BEFORE PROCEEDING WITH THE WORK

DO NOT SCALE DRAWINGS

THIS DRAWING SHALL NOT BE USED FOR CONSTRUCTION PURPOSES UNTIL SIGNED BY THE ENGINEER

DATE JYLY 2020

DRAWN S.S.

DATE JULY 2020

CHECKED J.C.J.

ISSUED 15 JULY 2020

CONSULTANT

CONSULTANT

S.J. LAWRENCE
ARCHITECTURAL I n c.
18 DEAKING STREET SUITE 205 NEPEAN, ,ONTARIO K2E 8B7
TEL (613) 739 7770 e-mail; brandon@sjarchitect.com

PROJECT

CITYSCAPE COMMERCIAL WAREHOUSE

144 BENTLEY AVENUE OTTAWA,ONTARIO

DRAWING

MECHANICAL
SPECIFICATIONS

SCALE AS SHOWN

SHEET M-7

PROJ. NO. AEG 20-727

REV.

GENERAL NOTES

1. SUPPLY, INSTALL, AND PROVIDE ALL LABOUR, EQUIPMENT, MATERIALS AND TOOLS NECESSARY TO COMPLETE ALL SYSTEMS SHOWN ON THE DRAWINGS, THUS RENDERING A COMPLETE INSTALLATION. THE WORK SHALL BE TESTED AND LEFT COMPLETE AND IN SATISFACTORY OPERATION SUBJECT TO THE APPROVAL OF THE AUTHORITIES HAVING JURISDICTION AND THE OWNER'S REPRESENTATIVE.

2. THIS CONTRACTOR SHALL ARRANGE AND PAY FOR THE REMOVAL OF HIS DEBRIS LEFT OVER BY NEW MECHANICAL EQUIPMENT SPECIFIED ON DRAWINGS.

3. APPLY FOR, OBTAIN, AND PAY FOR ALL FEES, PERMITS, LICENSES, INSPECTIONS AND EXAMINATIONS PERTINENT TO THE MECHANICAL WORK. FORWARD OR SUBMIT TO THE OWNERS UPON COMPLETION OF THE CONTRACT, THE FINAL UNCONDITIONAL ACCEPTANCE CERTIFICATE OF THE AUTHORITIES HAVING JURISDICTION.

4. VISIT AND EXAMINE THE SITE AND ALL OTHER PERTINENT DRAWINGS TO VERIFY THAT THE WORK CAN BE PERFORMED AS INDICATED AND ADVISE THE OWNERS REPRESENTATIVE OF ANY DISCREPANCIES. THE TENDERING PARTIES SHALL NOTIFY THE ENGINEER OF ANY ERRORS OR OMISSIONS IN THE PLANS AND SPECIFICATIONS, IN WRITING, MINIMUM 3 WORKING DAYS PRIOR TO TENDER CLOSING, SO THAT SAME MAY BE PROPERLY DEALT WITH BEFORE THE CLOSING DATE OF TENDERS. NO ALLOWANCES WILL BE MADE FOR FAILURE TO DO SO AND FOR ANY OBVIOUS OVERSIGHTS.

5. ALL EQUIPMENT AND INSTALLATION TO COMPLY WITH CURRENT PROVINCIAL AND MUNICIPAL BY-LAWS, CODES, FIRE REGULATIONS, AND STANDARDS OF THE AUTHORITIES HAVING JURISDICTION PERTINENT TO THIS CONTRACT. INSTALLATION ALSO TO MEET MANUFACTURERS SPECIFICATIONS AND RECOMMENDATIONS. ALL EQUIPMENT TO BE CSA APPROVED.

6. EXCEPT WHERE INDICATED ON THE DRAWINGS TO RE-USE EXISTING MATERIAL, ALL MATERIALS USED FOR CONSTRUCTION OF THESE SYSTEMS SHALL BE NEW, CSA APPROVED AND OF REASONABLE STANDARD AND QUALITY. WORKMANSHIP SHALL BE THE ACCEPTED STANDARD OF THE INDUSTRY. UNLESS INDICATED, ALL EXISTING EQUIPMENT AND MATERIAL NOT RE-USED OR OTHERWISE NOTED AS FOR DISPOSAL BECOME THE PROPERTY OF THIS CONTRACTOR AND SHALL BE REMOVED FROM THE JOB SITE.

7. REFER TO THE ARCHITECTURAL/INTERIOR LAYOUT DRAWINGS AND THE OTHER DRAWINGS THAT MAKE UP A COMPLETE TENDER DRAWING SET FOR EQUIPMENT LOCATIONS AND EXACT LAYOUTS BEFORE PROCEEDING WITH ANY WORK. THE GENERAL ARCHITECTURAL SPECIFICATION FORMS AN INTEGRAL PART OF THE MECHANICAL CONTRACTS. ALL REQUIREMENTS OF THE ARCHITECTURAL SPECIFICATION PERTAINING TO MECHANICAL WORK MUST BE COMPLIED WITH. PRIOR TO INSTALLATION EQUIPMENT RELOCATION OF 3.0M (10FT.) DISTANCE SHALL ENTAIL NEITHER AN EXTRA NOR A CREDIT.

8. SUBMIT 8 CERTIFIED COPIES OF SHOP DRAWINGS TO THE CONSULTANTS FOR APPROVAL FOR ALL EQUIPMENT PRIOR TO ORDERING. THIS SUBMISSION SHALL INCLUDE A TITLE PAGE IDENTIFYING THE CLIENT, PROJECT LOCATION, CONSULTANT, GENERAL CONTRACTOR, SUB-CONTRACTOR, AND EQUIPMENT DISTRIBUTOR.

9. PROVIDE LAMACOID NAME PLATES FOR ALL EQUIPMENT USING A MINIMUM OF 1/4" HIGH LETTERING. THE NAME PLATES SHALL IDENTIFY THE EQUIPMENT USING THE ID TAG UTILIZED ON THE DESIGN DRAWING, AND SHALL ALSO INDICATE THE SYSTEM SERVICED BY THE EQUIPMENT.

10. BE RESPONSIBLE FOR CARE OF THE BUILDING. DO ALL CUTTING, PATCHING AND PAINTING REQUIRED FOR THE WORK OF THIS TRADE. PROVIDE ACCESS DOORS FOR ALL CONCEALED DEVICES. WORK TO BE PERFORMED BY THE GENERAL CONTRACTOR'S FORCES AT THE MECHANICAL CONTRACTORS EXPENSE. CLEAN UP ALL DEBRIS UPON COMPLETION OF CONTRACT. COOPERATE WITH ALL OTHER TRADES.

11. ARRANGE FOR X-RAY INSPECTION OF ALL CONCRETE SLABS FOR RE-INFORCING STEEL AND CONDUIT ETC. LOCATIONS PRIOR TO ANY CORE DRILLING.

12. PROVIDE FOR THE MAINTAINING OF ALL FIRE SEPARATIONS CROSSED BY ANY MECHANICAL SYSTEM COMPONENT ASSOCIATED WITH THIS CONTRACT.

13. COORDINATE WITH OWNER'S PERSONNEL FOR CONNECTIONS TO ALL EQUIPMENT AND SERVICES ASSOCIATED WITH THIS PROJECT.

14. WHERE MODIFICATION OF EXISTING FACILITIES IS REQUIRED ASSUME FULL RESPONSIBILITY FOR ANY DISRUPTION OF EXISTING SYSTEMS. PROVIDE ALL TEMPORARY CONNECTIONS REQUIRED TO MAINTAIN EXISTING SYSTEMS IN SERVICE DURING NORMAL OPERATING HOURS. SHUT DOWN OF EXISTING SYSTEMS MAY ONLY BE MADE AS DIRECTED BY OWNER'S REPRESENTATIVE. MAKE GOOD ALL MECHANICAL, ELECTRICAL, AND OTHER ASSOCIATED WORK DISTURBED DURING CONSTRUCTION. RELOCATE EXISTING WORK AND COMPONENTS TO ACCOMMODATE NEW WORK NECESSARY TO ALLOW COMPLETION OF THE SYSTEMS AS INDICATED.

15. WHERE NOTED FOR EQUIPMENT TO BE REMOVED, THE EQUIPMENT SHALL BE DISCONNECTED, REMOVED AND REMOVED FROM THE SITE UNLESS OTHERWISE NOTED. ALSO REMOVE ALL ASSOCIATED MECHANICAL AND ELECTRICAL FEEDS. BREAK BACK, CAP AND MAKE SAFE IN CONCEALED CEILING CAVITY NO LESS THAN 24" (610mm) ABOVE FINISHED CEILING. CLEAN RELATED AREA IMMEDIATELY TO AID OTHER TRADES IN CONTINUANCE OF WORK.

16. WHERE NOTED FOR EQUIPMENT TO BE RELOCATED, THIS CONTRACTOR SHALL RELOCATE NOTED EQUIPMENT ASSEMBLY AND EXTEND ALL ASSOCIATED UTILITIES TO NEW LOCATION, CONCEAL UTILITIES WHEREVER POSSIBLE. CLEAN, REFURBISH AND MAKE OPERATIONAL AS REQUIRED TO PROPER OPERATING CONDITION. REPAINT ALL CORRODED SURFACES, COLOUR TO MATCH EXISTING WITH BRUSHED ON RUSTOLEUM OR TREMCLAD PRODUCT.

17. THIS CONTRACTOR SHALL BE RESPONSIBLE FOR RELOCATING ALL GAS, PLUMBING, HVAC EQUIPMENT, AND MECHANICAL SYSTEMS AS WELL AS RELATED ELECTRICAL SYSTEMS AS REQUIRED TO FACILITATE THE REMOVAL, REPLACEMENT OR INSTALLATION OF NEW EQUIPMENT. MAINTAIN THE OPERATION OF TEMPORARILY RELOCATED SERVICES AS REQUIRED UNTIL INSTALLATION OF OTHER EQUIPMENT IS COMPLETED. RELOCATE ALL AFFECTED SYSTEMS BACK TO ORIGINAL LOCATION IF MAINTAINING MAINTENANCE CLEARANCES AROUND EQUIPMENT, OR TO ADJACENT LOCATION AS REQUIRED TO MAINTAIN ALL MAINTENANCE CLEARANCES AROUND NEW EQUIPMENT.

18. THIS CONTRACTOR IS RESPONSIBLE FOR CONTACTING IN WRITING BOTH THE OWNERS PROJECT MANAGER AND THE CONSULTANT PRIOR TO MAKING ANY CHANGES TO THE DESIGN SPECIFICATION OR DESIGN INTENT. FAILURE TO CONSULT AND SEEK WRITTEN APPROVAL FOR THE CHANGE INCLUDING OFFERING RELATED CREDITS, PLACES ALL ASSOCIATED COSTS OF REPLACING THE INSTALLATION COMPLETE ON THIS CONTRACTOR. THIS CONDITION EXTENDS TO ALL WORK AND EQUIPMENT RELATED TO THIS CONTRACT, WHETHER NOTED IN SITE VISIT REPORTS OR NOT.

19. IN THE EVENT OF ANY EXTRA OR ADDITIONAL WORK OF ANY NATURE BEING REQUIRED DURING THE PROGRESS OF THE WORK, THIS SUB-CONTRACTOR SHOULD BE AWARE THAT IN ORDER TO SECURE SETTLEMENT FOR SUCH EXTRAS AT THE TIME HE IS REQUESTED TO DO THE WORK, UNLESS THEY ARE APPROVED BY THE ENGINEER, THEY WILL NOT BE ALLOWED.

20. THE CONTRACTOR SHALL PROVIDE A WRITTEN WARRANTY COVERING ALL PRODUCTS AND WORKMANSHIP WHICH SHALL BE GUARANTEED TO BE FREE FROM DEFECTS FOR A PERIOD OF ONE YEAR FROM DATE OF SUBSTANTIAL COMPLETION OF THE PROJECT. EQUIPMENT SUPPLIED WITH AN EXTENDED WARRANTY SHALL BE GUARANTEED BY THE TRADE FOR SUCH EXTENDED PERIOD AND THE TRADE SHALL ARRANGE FOR REPLACEMENT OR REPAIR OF ANY ITEM REQUIRING REPLACEMENT UNDER AN EXTENDED WARRANTY, AFTER THE FIRST YEAR.

21. AT THE COMPLETION OF THE PROJECT THE MECHANICAL CONTRACTOR SHALL PROVIDE 3 COPIES OF AN OPERATING AND MAINTENANCE MANUAL FOR THE INSTALLED EQUIPMENT AND SYSTEMS. THIS INFORMATION SHALL INCLUDE A COPY OF THE WRITTEN WARRANTY PROVIDED, COPIES OF THE ACCEPTANCE CERTIFICATES FROM THE AUTHORITIES HAVING JURISDICTION, COPIES OF ALL TESTING AND BALANCING RESULTS, EQUIPMENT/SYSTEM SPECIFICATION SHEETS, EQUIPMENT/SYSTEM OPERATING AND MAINTENANCE MANUALS, CONTACT INFORMATION ON QUALIFIED SERVICE COMPANIES, AND A SET OF AS-BUILT DRAWINGS. THIS MANUAL SHALL BE PRESENTED IN A 3-RING BINDER, WITH INDIVIDUAL TABS FOR EACH SECTION, AND INCLUDING A TITLE PAGE INDICATING THE CLIENT, PROJECT LOCATION, CONSULTANT, GENERAL CONTRACTOR, SUB-CONTRACTOR, AND THE SUBSTANTIAL COMPLETION DATE.

H.V.A.C. SPECIFICATION

1. ALL NEW DUCTWORK SHALL BE MADE OF GALVANIZED SHEET STEEL CONSTRUCTED AND SUPPORTED IN COMPLIANCE WITH SMACNA AND ASHRAE STANDARDS.

2. ALL JOINTS SHALL BE MADE AIR TIGHT WITH LAPS IN DIRECTION OF AIR FLOW. DUCT LEAKAGE SHALL NOT EXCEED THE MAX. AMOUNT LISTED IN SMACNA.

3. ALL DUCTS HAVING ANY SIZE OVER 300MM (12") SHALL COMPLY TO SMACNA STANDARDS.

4. ALL TEES, BENDS, OR ELBOWS SHALL BE MADE WITH A CENTER-LINE RADIUS OF NOT LESS THAN 1.5 TIMES THE WIDTH OF THE DUCT. WHERE INDICATED ON DRAWINGS OR WHERE SPACE CONDITIONS DO NOT PERMIT, SQUARE THROAT FITTING ARE TO BE USED EQUIPPED WITH DOUBLE THICKNESS TURNING VANES.

5. DUCTS SHALL BE SUPPORTED BY HANGERS FASTENED TO THE SIDE AND BOTTOM OF THE DUCT BY BOLTS, RIVETS, OR METAL SCREWS. DUCT HANGERS SHALL BE SUSPENDED FROM STRUCTURAL BEARINGS SUCH AS BEAMS, TOP CHORDS OF JOISTS OR STRUCTURAL CONCRETE SLABS. WHERE STRUCTURAL BEARINGS DO NOT EXIST, THE CONTRACTOR SHALL PROVIDE ANGLE OR CHANNEL IRON MEMBERS FROM THE NEAREST STRUCTURAL BEARINGS TO SUPPORT HANGERS. ALL EQUIPMENT IN CEILING SHALL BE SUSPENDED FROM STRUCTURAL MEMBERS INDEPENDENTLY FROM CEILING.

6. PROVIDE FLEX CONNECTIONS IN SUPPLY AND RETURN DUCTWORK, AND IN EXHAUST DUCTWORK CONNECTION TO FANS.

7. USE ROUND RIGID DUCT AND RECTANGULAR DUCTING AS SHOWN ON DRAWINGS AND PLANS. USE RIGID DUCTS TO DIFFUSER/GRILLE.

8. INSTALL 1" (25MM) THERMAL INSULATION ON ALL NEW SUPPLY AIR DUCTWORK. PROVIDE FOIL FACE JACKET SUITABLE FOR COLD DUCT APPLICATIONS.

9. FLEXIBLE DUCTWORK SHALL NOT BE USED.

10. PROVIDE BALANCING DAMPERS WHERE INDICATED ON THE DRAWINGS AND WHERE REQUIRED TO BALANCE THE SYSTEMS. DAMPERS TO BE SIZED TO SUIT DUCTWORK. MANUAL BALANCING DAMPERS INSTALLED IN DUCTS UP TO 300MM (12") SHALL BE OF SINGLE BLADE TYPE AND OVER 300MM (12") SHALL BE MULTIBLADE PATTERN.

11. PROVIDE BACKDRAFT DAMPERS WHERE INDICATED ON THE DRAWINGS.

12. PROVIDE FIRE DAMPERS WHERE INDICATED ON THE DRAWING AND/OR REQUIRED BY THE LOCAL AUTHORITIES.

13. ACCESS PANELS SHALL BE PROVIDED IN DUCTS WHERE AIR VALVES, BACKDRAFT DAMPERS, OR FIRE DAMPERS ARE INSTALLED. LOCATE PANELS UPSTREAM OF DEVICE. PROVIDE ACCESS DOORS WHERE DEVICES ARE CONCEALED IN WALLS, CEILINGS, OR FLOORS ETC.

14. EXHAUST DUCT TERMINATION POINTS ON WALLS TO BE MINIMUM 10 FT BACK FROM WALL EDGE IN ANY DIRECTION, AND 10 FT FROM ANY VENTILATION AIR INTAKE LOCATION. PROVIDE INSECT SCREEN ON EXHAUST OUTSIDE TERMINATION.

15. ROOF CURBS FOR NEW MECHANICAL EQUIPMENT SHALL BE CO-ORDINATED WITH GENERAL TRADES.

16. ADJUST THE HVAC UNIT O/A DAMPERS TO MEET THE CONTINUOUS VENTILATION RATE REQUIRED TO MEET ASHRAE STANDARDS AND AS SPECIFIED.

17. ALL APPARATUS SUPPLIED BY THE MECHANICAL CONTRACTOR SHALL BE COMPLETE WITH ELECTRIC MOTORS, DISCONNECT SWITCHES, AND STARTERS. ALL MOTORS SHALL BE MANUFACTURED AND INSTALLED IN COMPLIANCE WITH CSA REQUIREMENTS AND CEMA STANDARDS.

18. HVAC EQUIPMENT SHALL NOT BE USED FOR TEMPORARY HEAT OR VENTILATION PURPOSES DURING CONSTRUCTION; EQUIPMENT SHALL NOT BE OPERATED UNTIL CONSTRUCTION IS SUBSTANTIALLY COMPLETE, AND READY FOR TESTING. THIS CONTRACTOR SHALL ARRANGE & PAY FOR ALL TEMPORARY HEATING REQUIRED DURING CONSTRUCTION.

19. ENSURE THAT ALL DUCTWORK IS CLEAN AND FREE OF DIRT, DUST, GRIME, AND DEBRIS, ETC. BEFORE INITIAL OPERATION OF AIR SYSTEMS AFTER MODIFICATIONS.

20. PROVIDE AND INSTALL NEW FILTERS FOR VENTILATION EQUIPMENT 1 DAY PRIOR TO OPENING.

21. TESTING:

i) TEST CONTROL OPERATING RANGES AND SENSITIVITIES, INCLUDING HVAC OPERATION AND EXHAUST FANS.
ii) TEST SAFETY CONTROLS.
iii) CHECK SUMMER/WINTER CHANGEOVER CONTROLS.
iv) BALANCE THE SYSTEM SUCH THAT TERMINAL AIR FLOWS ARE WITHIN +10%/-10% OF DESIGN VALUES.
v) MARK DAMPER AND CONTROL POSITION SETTINGS.
vi) SUBMIT 3 COPIES OF FINAL COMMISSIONING REPORT TO OWNER'S REPRESENTATIVE AND TO THE DESIGN CONSULTANTS.
vii) TEST HVAC UNITS, HRV's AND EXHAUST FANS FOR S/A FLOW, O/A FLOW, PRESSURE ACROSS FAN, RETURN AIR FLOW, FAN RPM, AND FAN MOTOR AMPERAGE RESULTS ON BALANCING REPORT.
viii) MAKE ALLOWANCE FOR 2 ADDITIONAL SITE VISITS FOR COMFORT ADJUSTMENTS.

22. DIFFUSERS AND GRILLES SHALL BE <u>E.H. PRICE</u>; REFER TO DIFFUSER SCHEDULE DRAWING M-7.

23. THERMAL INSULATION (50mm THICK C/W FLEXCLAD JACKET) IS REQUIRED ON EXPOSED EXTERIOR DUCTWORK. ALL EXHAUST/FRESH AIR DUCTS (5 metres MINIMUM BACK FROM EXTERIOR WALL/ROOF) SHALL HAVE THERMAL INSULATION.

FIRE PROTECTION SPECIFICATION

1. <u>SCOPE OF WORK</u>

A. THE CONTRACTOR IS RESPONSIBLE FOR ALL WORK, MATERIALS, AND LABOR REQUIRED TO SATISFY A COMPLETE WORKING SYSTEM WHETHER SPECIFIED OR IMPLIED.

B. THE WORK IS TO BE PERFORMED IN STRICT COMPLIANCE WITH NFPA 13 AND 14 (LATEST EDITION), ALL CODES AND OTHER NFPA REGULATIONS GOVERNING WORK OF THIS NATURE.

C. THE CONTRACTOR SHALL BEFORE SUBMITTING ANY PROPOSAL, EXAMINE THE PROPOSED SITE AND SHALL DETERMINE FOR HIMSELF THE CONDITIONS THAT MAY EFFECT THE WORK. NO ALLOWANCE SHALL BE MADE IF THE CONTRACTOR FAILS TO MAKE SUCH EXAMINATIONS.

D. ALL EQUIPMENT AND MATERIALS SHALL BE AS SPECIFIED OR "APPROVED EQUAL" BY THE ENGINEER.

E. GENERAL:

.1 SUPPLY ALL MATERIALS, LABOUR, PLANT, TOOLS, EQUIPMENT, SEALED WORKING DRAWINGS, AND SERVICES NECESSARY TO PROVIDE A COMPLETE FIRE PROTECTION SYSTEM AS DESCRIBED HEREIN AND SHOWN ON THE DRAWINGS INCLUDING, BUT NOT LIMITED TO THE FOLLOWING:

.1 ALL PIPING INCLUDING EXTERNAL FIRE DEPARTMENT PUMPER CONNECTIONS, EQUIPMENT.
.2 FRY PIPE SYSTEM COMPRESSOR, PIPING, COMPONENTS & ACCESSORIES.
.3 WET & DRY PIPING SPRINKLER SYSTEM.
.4 ALL FIRE EXTINGUISHERS AND BRACKETS.
.5 ALL SPRINKLERS, PIPING, ETC.
.6 JOCKEY PUMP, PIPING, COMPONENTS AND ACCESSORIES.
.7 PREPARATION OF SHOP DRAWINGS, APPROVAL BY AUTHORITIES HAVING JURISDICTION, INSPECTION, TESTING AND APPROVAL AS SPECIFIED HEREIN AND AS REQUIRED BY AUTHORITIES HAVING JURISDICTION.

2. <u>PERMITS</u>

A. THE CONTRACTOR SHALL SECURE ALL PERMITS OR APPLICATIONS AND PAY ANY AND ALL FEES.

3. <u>SHOP DRAWINGS</u>

A. SUBMIT MATERIAL LIST AND SHOP DRAWINGS FOR MAJOR EQUIPMENT TO THE ENGINEER FOR APPROVAL. THE CONTRACTOR SHALL SUBMIT THREE SETS OF SHOP DRAWINGS AND THEY SHALL BE CLEARLY LABELED.

4. <u>SPRINKLER PIPING AND STANDPIPE</u>

A. PIPING MATERIAL SHALL BE BLACK STEEL, WITH FLANGED, ROLL-GROOVED COUPLINGS, OR THREADED JOINTS.

5. <u>PIPE SUPPORTS</u>

A. ALL HANGERS MUST BE AN APPROVED TYPE BY NFPA 13R. NO FIRE WATER PIPING IS TO BE SUPPORTED FROM ANY MECHANICAL OR ELECTRICAL DEVICES.

B. ALL PIPE SHALL BE SUPPORTED FROM THE BUILDING STRUCTURE IN A NEAT AND WORKMANLIKE MANNER. VERTICAL RUNS SHALL BE SUPPORTED PROPERLY WITH STEEL PIPE CLAMPS. THE USE OF WIRE OR STRAP METAL HANGER TO SUPPORT PIPES WILL NOT BE PERMITTED. HANGING PIPES FROM OTHER PIPES WILL NOT BE PERMITTED. PIPING SHALL BE CAREFULLY COORDINATED BEFORE INSTALLATION WITH OTHER SYSTEMS AND EQUIPMENT IN CHASES AND OTHER CONGESTED AREAS.

6. <u>WORKING PLANS</u>

A. THE DRAWINGS INCLUDED AS PART OF THIS SET OF CONSTRUCTION DOCUMENTS SHOW GENERAL LAYOUT ONLY. SHOW HEADS PIPE MAINS, BRANCH LINES, SUPERVISED VALVES, ETC. FINAL WORKING DRAWINGS, INCLUDING HYDRAULIC CALULATIONS SHALL BE PREPARED BY THE SPRINKLER CONTRACTOR AND REVIEWED APPROVED AND STAMPED BY THE FIRE PROTECTION ENGINEER.

B. HYDRAULIC DESIGN:

.1 PROVDE HYDRAULIC DESIGN IN PREPARING SHOP DRAWINGS FOR SPRINKLER AND STANDPIPE SYSTEM. CARRY OUT NECESSARY CALCULATIONS, AND SUBMIT CALCULATIONS, DATA, AND DRAWINGS IN ACCORDANCE WITH REQUIREMENTS OF NFPA STANDARD 13 & 14, AND AUTHORITY HAVING JURISDICTION.
.2 LIMIT PRESSURE TO FIRE HOSE CABINETS TO 448 KPA (65 PSI). USE APPROVED PRESSURE REDUCING VALVE STATIONS AS SPECIFIED.
.3 PERFORM A HYDRANT FLOW TEST TO DETERMINE FLOW CHARACTERISTICS ON THE STREET WATERMAIN.
.4 CONFIRM WITH THE AUTHORITIES THE ALLOWABLE FLOW TEST DATA TO BE USED IN THE DESIGN CALCULATIONS.

7. <u>TESTS</u>

A. ACCEPTANCE AND HYDROSTATIC TESTS TO BE PERFORMED IN ACCORDANCE WITH NFPA 13 AND NFPA 14.

8. <u>MISCELLANEOUS</u>

A. DO NOT SCALE THIS DRAWING FOR EXACT DIMENSIONS. VERIFY ALL FIGURES, CONDITIONS, AND DIMENSIONS AT THE JOB SITE.

B. THE PLANS ARE INTENDED TO BE DIAGRAMATIC. THEY ARE NOT INTENDED TO SHOW EVERY ITEM IN ITS EXACT LOCATION.

9. <u>GUARANTEE</u>

AMATERIALS, EQUIPMENT AND INSTALLATION SHALL BE GUARANTEED FOR PERIOD OF ONE(1) YEAR FROM DATE OF ACCEPTANCE. DEFECTS WHICH APPEAR DURING THAT PERIOD SHALL BE CORRECTED AT THE CONTRACTOR'S EXPENSE.

PLUMBING SPECIFICATION

EXECUTION

1. PLUMBING PIPING INSTALLATION:

.1 CONFORM TO REQUIREMENTS OF ONTARIO BLDG. CODE FOR PRESSURE PIPING.

.2 INSTALL PIPING STRAIGHT, PARALLEL, AND CLOSE TO WALLS AND CEILINGS, WITH SPECIFIED PITCH. USE FACTORY FABRICATED FITTINGS FOR DIRECTION CHANGES. CONCEAL PIPING WHERE POSSIBLE.

.3 INSTALL GROUPS OF PIPING PARALLEL TO EACH OTHER, SPACED TO PERMIT APPLICATION OF INSULATION, IDENTIFICATION, AND SERVICE ACCESS ON TRAPEZE HANGERS.

.4 WHERE PIPE SIZE DIFFERS FROM CONNECTION SIZE OF EQUIPMENT, INSTALL REDUCING FITTINGS CLOSE TO EQUIPMENT. REDUCING BUSHINGS ARE NOT PERMITTED.

.5 THE MECHANICAL CONTRACTOR SHALL PROVIDE ALL NECESSARY OPENINGS THROUGH WALLS AND SLAB AS REQUIRED FOR NEW PIPING.

.6 BRASS AND COPPER PIPE AND TUBING SHALL BE FREE FROM SURFACE DAMAGE. REPLACE DAMAGED PIPE OR TUBING.

.7 REAM ENDS OF PIPES AND TUBES BEFORE ERECTING.

.8 LAY COPPER TUBING SO THAT IT IS NOT IN CONTACT WITH DISSIMILAR METAL AND WILL NOT BE KINKED OR COLLAPSED.

.9 USE NON-CORROSIVE LUBRICANT OR TEFLON TAPE APPLIED TO MAKE THREAD FITTINGS.

.10 GROOVED PIPE ENDS: CUT SQUARE, SEATING SURFACE CLEAN AND FREE FROM INDENT AND SCOREMARKS.

.11 INSTALL DIELECTRIC COUPLINGS WHEREVER PIPING OF DISSIMILAR METALS ARE JOINED.

.12 CLEAN ENDS OF PIPES OR TUBING AND RECESSES OF FITTINGS TO BE BRAZED OR SOLDERED. ASSEMBLE JOINTS WITHOUT BINDING.

.13 INSTALL PIPING STRAIGHT PARALLEL AND CLOSE TO WALLS AND CEILINGS WITH REQUIRED PITCH. USE STANDARD FITTINGS FOR DIRECTIONAL CHANGES.

.14 WHERE PIPE SIZE DIFFERS FROM CONNECTION SIZE OF EQUIPMENT, INSTALL REDUCING FITTINGS CLOSE TO EQUIPMENT. BUSHINGS ARE NOT PERMITTED.

.15 REAM ENDS OF PIPE AND TUBES BEFORE INSTALLATION.

.16 SCREWED JOINT MATERIAL SHALL BE TEFLON TAPE OR AN APPROVED NON-CORROSIVE LUBRICANT APPROVED FOR SERVICE.

2. HANGERS, ANCHORS AND GUIDES:

.1 APPROVED ANCHORS SHALL BE PROVIDED CONSISTING OF STEEL CLAMPS SUPPORTING TO THE PIPE AND FASTENED TO THE BUILDING CONSTRUCTION OR IMBEDDED IN A CONCRETE PIER SUCH THAT ALL FORCES AND THRUSTS ACTING AT THE ANCHOR POINT ARE RESTRAINED.

.2 PREVENT VIBRATION OR SWAYING.

.3 SUPPORTS MADE OF WIRE, ROPE, WOOD OR ANY OTHER VULNERABLE MAKE-SHIFT MATERIAL ARE NOT PERMITTED.

.4 FOR UNINSULATED COPPER PIPE OR TUBING THE CLAMPS AND SUPPORTS SHALL BE ELECTROPLATED COPPER FINISH.

.5 PROVIDE ADDITIONAL SUPPORTS AT CHANGES IN PIPE DIRECTION AND FOR CONCENTRATION OF LOADS DUE TO WEIGHT OF VALVES, STRAINERS, ETC.

3. PIPE TESTING "REQUIRED":

.1 TEST ALL PIPING AT 1-1/2 TIME SYSTEM OPERATING PRESSURE FOR PERIOD OF 8 HOURS.

.2 TEST SYSTEMS IN ACCORDANCE TO MUNICIPAL REQUIREMENTS IN THE PRESENCE OF THE ENGINEER.

.3 PROVIDE A CERTIFICATE OF ACCEPTANCE FROM INSPECTING AUTHORITY.

4. CLEAN UP:

.1 ALL BRASS TRIM SHALL BE CLEANED AND POLISHED AND TOUCH-UP OTHER COMPONENTS AS REQUIRED. REMOVE ALL DEBRIS AND GARBAGE FROM SITE.

.2 AFTER THE CONSTRUCTION IS COMPLETED CLEAN INTERIOR OF NEW DUCTWORK, FANS, INCLUDING GRILLES, AND DAMPERS ETC.

5. PROVIDE THERMAL INSULATION 12mm THICK FOR PIPES 63mm DIAMETER AND 25mm THICK FOR LARGER PIPES). PROVIDE IDENTIFICATION AND CANVAS JACKET WHERE PIPING IS EXPOSED.

SEISMIC CONTROL FOR MECHANICAL SYSTEMS

A. SEISMIC RESTRAINTS ARE TO BE PROVIDED FOR ALL NEW MECHANICAL COMPONENTS AFFECTED UNDER THIS CONTRACT.

B. PROVIDE SEISMIC RESTRAINTS IN ACCORDANCE WITH CURRENT NATIONAL BUILDING CODE AND ONTARIO BUILDING CODE.

C. THIS CONTRACTOR SHALL UTILIZE THE SUPPLIER FAMILIAR WITH THE DESIGN OF SEISMIC SYSTEMS TO PROVIDE A COMPREHENSIVE PACKAGE OF ISOLATION AND SEISMIC RESTRAINT FOR THE PROJECT.

D. PROVIDE DETAILED SHOP DRAWINGS SHOWING THE PROPOSED RESTRAINT SYSTEM FOR ALL REQUIRED COMPONENTS ON THE PROJECT. THE SHOP DRAWINGS SHALL INCLUDE CALCULATIONS CERTIFIED BY THE SEISMIC ENGINEER.

FIRESTOPPING FOR MECHANICAL SYSTEMS

A. PROVIDE 1.5 HR RATED FIRE DAMPERS FOR ALL DUCTS THAT PENETRATE FIRE RATED WALL ASSEMBLIES.

B. PROVIDE FIRESTOP CAULKING FOR ALL PIPING THAT PENETRATE FIRE RATED WALL AND FLOOR ASSEMBLIES.

C. PROVIDE FIRESTOP CAULKING FOR ALL CONTROL WIRING THAT PENETRATE FIRE RATED WALL AND FLOOR ASSEMBLIES.

D. PROVIDE DETAILED SHOP DRAWINGS SHOWING THE PROPOSED FIRESTOP SYSTEMS/COMPONENTS FOR EACH OF THE MECHANICAL SYSTEM PENETRATIONS.

E. FIRESTOPPING MATERIAL AND INSTALLATION WITHIN ANNULAR SPACE BETWEEN PIPES, SLEEVES AND ADJACENT FIRE SEPARATION TO BE ULC APPROVED.

F. SERVICE PENETRATION COMPONENTS AND ASSEMBLIES INCLUDING BACK-UP MATERIALS AND SUPPORTS SHALL BE CERTIFIED IN ACCORDANCE WITH CAN4-S115 AND ULC-S101M.

G. COMBINED AND/OR BUILT-UP SITE SYSTEMS SHALL BE DESIGNED IN ACCORDANCE WITH ULC AND TECHNICAL EVALUATIONS AS APPROVED BY AUTHORITIES HAVING JURISDICTION.

H. REFER TO ARCHITECTURAL DRAWINGS FOR FIRE SEPARATIONS.

CONTROLS SYSTEM

1. THE CONTROLS CONTRACTOR SHALL PROVIDE A COMPLETE CONTROL SYSTEM TO MEET THE REQUIREMENTS AS SPECIFIED ON MECHANICAL DRAWINGS..

ANTARES
Antares Engineering Group Inc.
Professional Mechanical, Electrical, Testing and Research Engineers
38 Sachs Forest Place, Ottawa, Ontario, K2E 7J4
Phone (613) 723-6034; e-mail: mail@antaresengineering.ca

NO.	DESCRIPTION	
3.	ISSUED FOR TENDER	15/01/2021
2.	TENDER FOR PRE-ENG. BUILDING STRUCTURE - ONLY	14/12/2020
1.	ISSUED FOR CLIENT REVIEW	15/11/2020

REVISIONS

CONTRACTOR SHALL CHECK AND VERIFY ALL DIMENSIONS AND REPORT ANY OMISSIONS OR DISCREPANCIES TO THE ENGINEER BEFORE PROCEEDING WITH THE WORK

DO NOT SCALE DRAWINGS

THIS DRAWING SHALL NOT BE USED FOR CONSTRUCTION PURPOSES UNTIL SIGNED BY THE ENGINEER

DATE JYLY 2020

DRAWN S.S.
DATE JULY 2020
CHECKED J.C.J.
ISSUED 15 JULY 2020

CONSULTANT

CONSULTANT

S.J. LAWRENCE ARCHITECTURAL I n c.
18 DEAKING STREET SUITE 205 NEPEAN, ,ONTARIO K2E 8B7
TEL (613) 739 7770 e-mail; brandon@sjarchitect.com

PROJECT

CITYSCAPE COMMERCIAL WAREHOUSE

144 BENTLEY AVENUE OTTAWA,ONTARIO

DRAWING

MECHANICAL SPECIFICATIONS

SCALE AS SHOWN

PROJ. NO. AEG 20-727

SHEET M-8

REV.