G E N E R A L N O T E S

1. CONSTRUCTION REVIEW

- CONTRACTOR ASSUMES COMPLETE RESPONSIBILITY FOR FULL SUPERVISION OF CONSTRUCTION WORK.
- SITE VISITS AND REVIEWS BY THE DESIGN ENGINEER OR REPRESENTATIVE ARE INTENDED FOR THE PURPOSE OF ASCERTAINING GENERAL CONFORMANCE WITH THE DESIGN CONCEPT. THE SITE REVIEWS DO NOT MEAN THAT THE DESIGN ENGINEER HAS SEEN ALL OF THE CONSTRUCTION OR CONSTRUCTION PROCEDURES.
- REVIEW OF CONSTRUCTION BY THE DESIGN ENGINEER DOES NOT RELIEVE THE CONTRACTOR OF HIS RESPONSIBILITY FOR ERRORS AND OMISSIONS AND FOR MEETING ALL THE REQUIREMENTS OF THE CONSTRUCTION AND CONTRACT DOCUMENTS.
- NOTIFY THE DESIGN ENGINEER 24 HOURS IN ADVANCE OF ANY REQUIRED SITE VISITS.
- THIRD PARTY INSPECTIONS ARE TO BE CARRIED OUT AS PER PROJECT SPECIFICATIONS.
- CONTRACTOR IS RESPONSIBLE FOR ANY COSTS ASSOCIATED WITH THE REMOVAL OF FINISHES REQUIRED FOR INSPECTIONS OR TESTING THAT IS COVERED BEFORE INSPECTIONS ARE COMPLETED.
- OBTAIN A PROFESSIONAL GEOTECHNICAL ENGINEER APPROVAL OF THE FOLLOWING ITEMS:

A. ALL EXCAVATIONS, PRIOR TO CASTING CONCRETE FOR FOUNDATIONS.
B. ALL ENGINEERED (COMPACTED) BACKFILL AS WORK PROGRESSES
C. ALL EARTH SUPPORT SYSTEMS (SHORING/EXCAVATIONS)
D. ALL EARTH BANKS
E. DEWATERING FOR LOWERING WATER TABLE
F. ANY WORK INVOLVING SOIL/ROCK/WATER/GASES ETC., IN SOIL

- PRIOR TO CASTING CONCRETE OBTAIN ENGINEERS APPROVAL OF PLACEMENT OF REINFORCEMENT STEEL.
- AT LEAST 75% OF REINFORCEMENT STEEL IN ANY STRUCTURAL MEMBER IS TO BE COMPLETED BEFORE INSPECTION CAN BE COMPLETED.

2. SHOP DRAWINGS NOTES

- SUBMIT SHOP DRAWINGS FOR ALL STRUCTURAL WORK AND ANY WORK AFFECTING THE STRUCTURE TO THE ARCHITECT. OBTAIN ARCHITECTS AND ENGINEER'S CONSENT BEFORE PROCEEDING WITH THE FABRICATION.
- EACH OF THE FOLLOWING SHOP DRAWINGS MUST BEAR THE SIGNATURE AND STAMP OF A QUALIFIED PROFESSIONAL ENGINEER REGISTERED IN THE PROVINCE.

A. PRECAST CONCRETE DRAWINGS
B. DRAWINGS FOR ANY TEMPORARY WORK
C. DRAWINGS FOR ANY STRUCTURAL PARTS DESIGNED BY THE CONTRACTOR'S FORCES, INCLUDING EXTERIOR BUILDING ENVELOPE.

- SHOP DRAWINGS MUST BE REVIEWED AND STAMPED REVIEWED BY THE GENERAL CONTRACTOR BEFORE ISSUING TO THE ARCHITECT. SHOP DRAWINGS NOT STAMPED BY THE GENERAL CONTRACTOR WILL BE REJECTED. ANY DELAYS IN THE CONSTRUCTION SCHEDULE DUE TO NON-COMPLIANCE WITH THIS REQUIREMENT SHALL BE THE RESPONSIBILITY OF THE GENERAL CONTRACTOR.
- SUBMIT ALL RELEVANT SHOP DRAWINGS FOR THE STRUCTURAL ENGINEERS REVIEW BEFORE FABRICATION. ALL SHOP DRAWINGS SHALL BEAR THE SEAL OF A REGISTERED PROFESSIONAL ENGINEER LICENSED WITHIN THE APPROPRIATE JURISDICTION.
- GENERAL CONTRACTOR AND SUB-TRADES SHALL INCLUDE TIME IN THEIR SCHEDULE FOR PROPER SHOP DRAWING REVIEW BY CONSULTANTS. CONTRACTORS SHALL ALLOW 5 BUSINESS DAYS TIME FOR REVIEW BY THE STRUCTURAL CONSULTANT, IN ADDITION TO TIME REQUIRED BY OTHER PARTIES.
- SHOP DRAWINGS MUST BE ORIGINAL, AND PRODUCED BY THE RESPECTIVE SUB-TRADES. ANY DRAWINGS SUBMITTED FOR REVIEW WHICH CONTAIN DRAWINGS OR PARTS OF DRAWINGS PRODUCED BY CUNLIFFE & ASSOCIATES WILL BE REJECTED, AND THE CONTRACTOR RESPONSIBLE FOR PRODUCING THE SHOP DRAWINGS SHALL TAKE RESPONSIBILITY FOR ANY RESULTING DELAYS IN CONSTRUCTION.
- THE SHOP DRAWING REVIEW IS NOT AN APPROVAL PROCESS. CUNLIFFE & ASSOCIATES, WILL REVIEW SHOP DRAWINGS FOR THE SOLE PURPOSE OF ASCERTAINING GENERAL CONFORMANCE WITH THE DESIGN CONCEPT SHOWN ON THE STRUCTURAL DRAWINGS. REVIEW OF SHOP DRAWINGS SHALL NOT MEAN THAT CUNLIFFE & ASSOCIATES, APPROVES THE DETAIL DESIGN INHERENT IN THE SHOP DRAWINGS, RESPONSIBILITY FOR WHICH SHALL REMAIN WITH THE CONTRACTOR SUBMITTING SAME. REVIEW BY CUNLIFFE & ASSOCIATES, SHALL NOT RELIEVE THE CONTRACTOR OF THEIR RESPONSIBILITY FOR ERRORS OR OMISSIONS IN THE SHOP DRAWINGS OR OF THEIR RESPONSIBILITY FOR MEETING ALL REQUIREMENTS OF THE CONSTRUCTION AND CONTRACT DOCUMENTS. THE CONTRACTOR IS RESPONSIBLE FOR DIMENSIONS TO BE CONFIRMED AND COORDINATED AT THE JOB SITE, FOR INFORMATION THAT PERTAINS SOLELY TO FABRICATION PROCESSES AND TO TECHNIQUES OF CONSTRUCTION AND INSTALLATION AND FOR COORDINATION OF THE WORK OF ALL SUB-TRADES.

3. CONSTRUCTION PLANNING & SAFETY

- REQUIREMENTS FOR MECH. EQUIPMENT, AND ANY TRADES OR SERVICES AFFECTING THE STRUCTURE, SHALL BE ESTABLISHED IN CONSULTATION WITH CORRESPONDING MANUFACTURERS OR SUPPLIERS AND THE ARCHITECT.
- LOCATION OF CONSTRUCTION JOINTS SHALL BE PLANNED IN ADVANCE
- CUNLIFFE & ASSOCIATES SHALL NOT BE RESPONSIBLE FOR CONSTRUCTION SAFETY, MEANS, TECHNIQUES AND CONSTRUCTION PROCEDURES OR TEMPORARY WORK AS REQUIRED BY THE CONSTRUCTOR TO BUILD AND COMPLETE THE STRUCTURE IN CONFORMITY WITH CONTRACT DOCUMENTS. CONTRACTOR TO RETAIN AN INDEPENDENT STRUCTURAL ENGINEER TO CARRY OUT THE NECESSARY TECHNIQUES TO BE USED TO BUILD AND COMPLETE THE STRUCTURE ACCORDING TO THE CONTRACT DOCUMENTS AND SAFETY GUIDELINES FROM LOCAL CODES/AUTHORITIES. CONTRACTOR SHALL SUPPLY DRAWINGS STAMPED BY A PROFESSIONAL ENGINEER.
- THE CONTRACTOR SHALL MAKE ADEQUATE PROVISIONS FOR CONSTRUCTION STRESSES AND FOR SUFFICIENT TEMPORARY BRACING TO KEEP THE STRUCTURE PLUMB AND IN TRUE ALIGNMENT AT ALL PHASES OF THE WORK, UNTIL COMPLETION (INCLUDING MASONRY WALLS, FLOOR AND ROOF DECKS, ETC.). ANY BRACING MEMBERS SHOWN ON PLANS ARE THOSE REQUIRED FOR THE FINISHED STRUCTURE, AND MAY NOT BE SUFFICIENT FOR ERECTION PURPOSES.
- ALL CONSTRUCTION WORK FOR TEMPORARY SHORING AND BRACING OF EXISTING STRUCTURE SHALL BE DONE ONLY AFTER PERMISSION HAS BEEN GRANTED BY THE CONSTRUCTION HEALTH AND SAFETY BRANCH OF THE GOVERNING MINISTRY OF LABOUR.
- PROTECT EXISTING BUILDINGS, TREES, FENCING, UTILITIES POLES, CABLES, ACTIVE UNDERGROUND SERVICES AND PAVING ON THE SITE OR ANY ADJOINING PROPERTIES FROM DAMAGE. DAMAGE RESULTING FROM THIS CONSTRUCTION WORK SHALL BE MADE GOOD TO THE APPROVAL OF THE ARCHITECT NO COST TO THE OWNER.
- TRUCKS, CRANES, HOISTS, OR ANY HEAVY EQUIPMENT OR MATERIALS ARE NOT ALLOWED TO ENTER ANY STRUCTURAL FLOOR OR ROOF AREA UNLESS SPECIFICALLY DESIGNED AND DESIGNATED FOR THESE PURPOSES. INSTALL TEMPORARY BARRIERS TO PREVENT ACCIDENTAL OVERLOADING DURING CONSTRUCTION. DESIGN, INSTALL AND MAINTAIN ADEQUATE SHORING SYSTEM AS REQUIRED TO CARRY ANY SUCH TEMPORARY LOADING FROM CONSTRUCTION MATERIALS AND/OR EQUIPMENT.
- NOTIFY ARCHITECT IMMEDIATELY UPON DISCOVERY OF ANY CONSTRUCTION ERROR, OMISSION, DEFECTIVE WORK, ETC., SO THAT THE MOST ECONOMICAL REMEDIAL MEASURES MAY BE DESIGNED AT THE EARLIEST POSSIBLE TIME.
- GENERAL CONTRACTOR SHALL NOTIFY MECHANICAL/ELECTRICAL CONTRACTORS THAT SUPPORT AND THE DESIGN OF SUCH SUPPORTS TO CARRY MECHANICAL/ELECTRICAL EQUIPMENT SHALL BE BY THE MECHANICAL/ELECTRICAL CONTRACTORS. OBTAIN STRUCTURAL ENGINEERS APPROVAL TO CONNECT TO EXISTING/NEW MAIN BUILDING STRUCTURE. DESIGN OF SUPPORTS SHALL BE STAMPED BY A QUALIFIED STRUCTURAL ENGINEER RETAINED BY THE MECHANICAL/ELECTRICAL CONTRACTOR.

1. ANY DEVIATION FROM THE CONDITIONS SHOWN ON THESE DRAWINGS MUST BE REPORTED TO THE ENGINEER.
2. THIS STRUCTURE HAS BEEN DESIGNED IN ACCORDANCE WITH THE REQUIREMENTS OF PART 4 OF THE O.B.C. (2012 EDITION-R2020) ONTARIO REGULATION 332/12 (AS AMENDED BY 88/19)
3. STANDARDS

- CSA STANDARD A23.3-14 DESIGN OF CONCRETE STRUCTURES
- CSA STANDARD A23.1-14 CONCRETE MATERIALS & METHODS OF CONCRETE CONSTRUCTION
- CAN/CSA-S16-14 LIMIT STATES DESIGNS OF STEEL STRUCTURES

4. ANY MODIFICATIONS TO EXISTING STRUCTURES ARE TO BE LIMITED TO WORK NOTED ON THESE DRAWINGS. ANY ADDITIONAL OR PROPOSED MODIFICATIONS TO EXISTING STRUCTURES MUST BE APPROVED BY THE ENGINEER
5. FOUNDATIONS

- ALL FOOTINGS ARE TO BEAR ON UNDISTURBED, HARD TO VERY STIFF SILTY CLAY
- BEARING CAPACITY USED IN THE FOOTING DESIGN IS ASSUMED TO BE SLS = 200 kPa / ULS = 350 kPa
- BEARING SURFACE IS TO BE INSPECTED BY GEOTECHNICAL ENGINEER PRIOR TO PLACING CONCRETE.
- FOR FURTHER INFORMATION SEE GEOTECHNICAL REPORT No. PG5424-1 PREPARED BY PATERSON GROUP INC.
- STEP FOOTINGS WHERE INDICATED ON PLAN AT THE RATE OF 2 HORIZONTAL TO 1 VERTICAL.

6. SLABS ON GRADE

- SLABS ON GRADE TO BE UNREINFORCED UNLESS NOTED.
- FOR COMPOSITION & COMPACTION OF FILL SUPPORTING SLABS ON GRADE SEE GEOTECHNICAL REPORT.
- PROVIDE 12 mm ASPHALT IMPREGNATED FIBREBOARD BETWEEN SLABS ON GRADE & FOUNDATION WALLS OR COLUMNS.
- SEE PLAN FOR SLAB CASTING PATTERN IN WAREHOUSE AND SLAB ON GRADE CONTROL JOINTS

7. MATERIALS

- CONCRETE STRENGTH AT 28 DAYS TO BE AS NOTED ON THESE DRAWINGS AND SPECIFICATIONS.
- REINFORCING STEEL TO BE DEFORMED GRADE 400R WITH Fy= 400 MPa.

8. CONCRETE COVER

- FOOTINGS 75 mm BOTTOM 50 mm SIDES
- WALLS 40 mm UNLESS NOTED OTHERWIS
-

9. REINFORCING STEEL DESIGNATION

8-20M x 1500 T/B

8 = NUMBER OF BARS
20M = SIZE OF BARS
1500 = LENGTH OF BARS
T = BAR LOCATION - TOP
B = BAR LOCATION - BOT
LENGTH OF BARS DOES NOT INCLUDE HOOKS OR BENDS

10. DOWELS

DOWELS TO FOOTINGS TO BE OF SAME DIAMETER AS THE LOWEST LIFT OF VERTICAL REINFORCING IN COLUMNS, PIERS OR WALLS.

11. REINFORCING STEEL SPLICES

REINFORCING STEEL SPLICES TO BE AS NOTED IN REINFORCING BAR LAP LENGTH TABLE ON S01 U/N.

12. LEGEND

B =	BOTTOM
B1 =	BOTTOM LOWER LAYER
B2 =	BOTTOM UPPER LAYER
BLL =	BOTTOM LOWER LAYER
BUL =	BOTTOM UPPER LAYER
C1 =	CONCRETE COLUMN NUMBER
CONT =	CONTINUOUS
DP =	DEPTH
DWL =	DOWELS
EE =	EACH END
EF =	EACH FACE
EL =	ELEVATION
ES =	EACH SIDE
EW =	EACH WAY
F1 =	PAD FOOTING NUMBER
H =	HORIZONTAL
(H) =	HOOKED BAR
O/C =	ON CENTER
P1 =	PIER NUMBER
T =	TOP
T1 =	TOP UPPER LAYER
T2 =	TOP LOWER LAYER
TLL =	TOP LOWER LAYER
TUL =	TOP UPPER LAYER
U/N =	UNLESS NOTED OTHERWISE
V =	VERTICAL
WF1 =	WALL FOOTING NUMBER

REINFORCING BAR LAP LENGTH TABLE

CONCRETE STRENGTH (MPa)	REINFORCING BAR LAP LENGTH (mm)				
	10M	15M	20M	25M	30M
20	475	700	850	1325	1575
25	425	600	750	1200	1400
30	400	550	675	1100	1275
35	375	525	625	1000	1200
40	350	475	600	950	1125

FOR SPECIAL CONDITIONS MULTIPLY THE VALUES LISTED ABOVE BY THE FOLLOWING FACTORS:
1. EPOXY COATED REINFORCING (X 1.5)
2. HORIZONTAL REINFORCING WITH >300 mm CONCRETE BELOW (X 1.3)
3. FOR CONDITIONS 1 & 2 OCCURRING SIMULTANEOUSLY (X 1.7)

DRAWING LIST

S01 GENERAL NOTES & TYPICAL DETAILS
S100 GROUND FLOOR/FOUNDATION PLAN
S300 SECTIONS

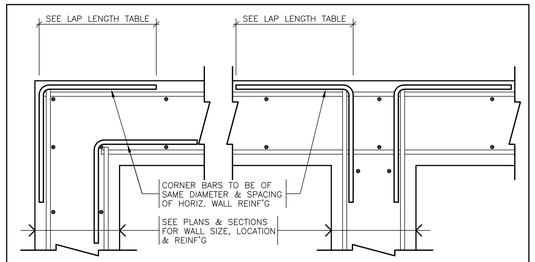

TYPICAL WALL INTERSECTION REINFORCEMENT
CONCRETE WALLS WITH 2 SHEETS OF REINFORCING (WALL THICKNESS GREATER THAN 215 mm)
NOT APPLICABLE TO SHEARWALLS. SEE SHEARWALL ELEVATION DRAWINGS

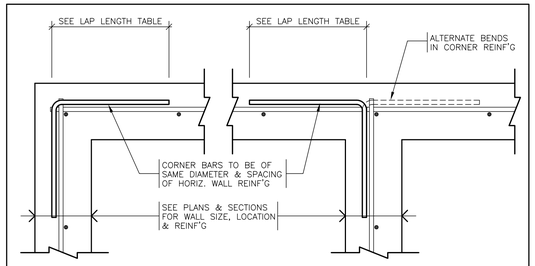

TYPICAL WALL INTERSECTION REINFORCEMENT
CONCRETE WALLS WITH 1 SHEET OF REINFORCING (WALL THICKNESS LESS THAN 215 mm)
NOT APPLICABLE TO SHEARWALLS. SEE SHEARWALL ELEVATION DRAWINGS

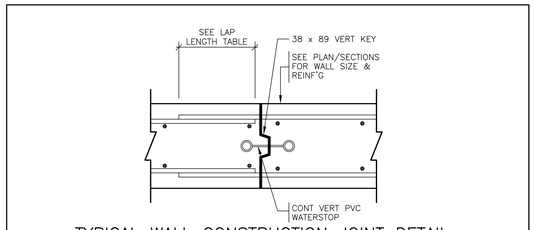

TYPICAL WALL CONSTRUCTION JOINT DETAIL
MAXIMUM SPACING OF CONSTRUCTION JOINTS TO BE 20 meters

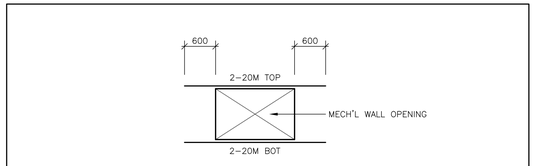

TYPICAL DETAIL AT CONCRETE WALL OPENING U/N

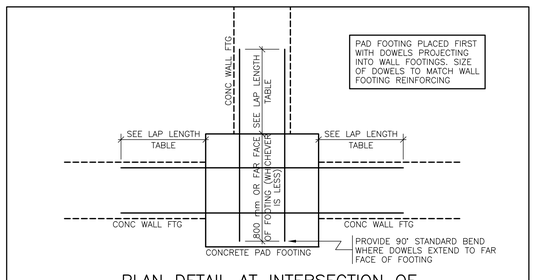

PLAN DETAIL AT INTERSECTION OF PAD FOOTING & WALL FOOTINGS

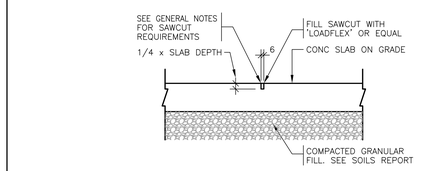

TYPICAL SAWCUT IN SLAB ON GRADE DETAIL

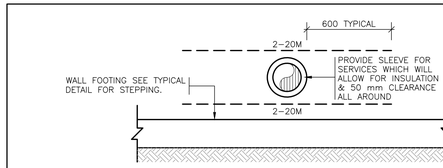

DETAIL-FOUNDATION AT SAN & STORM ENTRY
SEE PLANS AND MECHANICAL FOR LOCATION

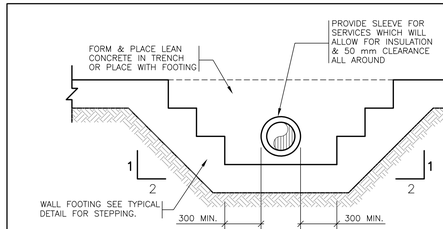

DETAIL-FOUNDATION AT UNDERGROUND SERVICE ENTRY
SEE PLANS AND MECHANICAL FOR LOCATION

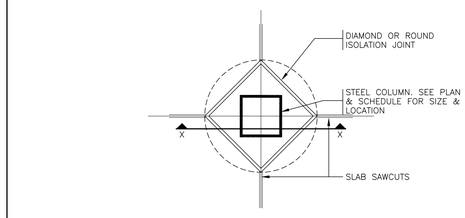

PLAN

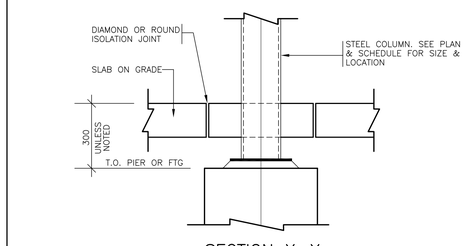

SECTION X-X

PLAN & SECTION AT COLUMN ISOLATION JOINTS IN SLABS ON GRADE

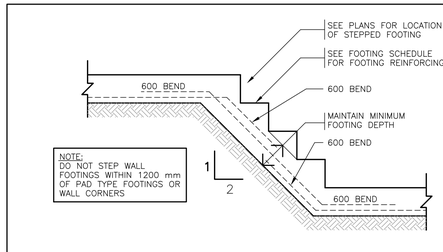

NOTE:
DO NOT STEP WALL FOOTINGS WITHIN 1200 mm OF PAD TYPE FOOTINGS OR WALL CORNERS

TYPICAL STEPPED WALL FOOTING DETAIL

No.	Revision Description	Date
1	ISSUE FOR PRELIMINARY PRICING	JAN 15/21

1. THE CONTRACTOR IS RESPONSIBLE FOR CHECKING AND VERIFYING ALL DIMENSIONS. ANY DISCREPANCY SHALL BE REPORTED TO THE ENGINEER;
2. THIS DRAWING IS TO BE READ IN CONJUNCTION WITH ALL MATERIAL RELEVANT TO THE PROJECT.
3. ADDITIONAL INFORMATION MAY BE ISSUED FOR CLARIFICATION TO ASSIST PROPER EXECUTION OF WORK. SUCH DRAWINGS WILL HAVE THE SAME MEANING AND INTENT AS IF THEY WERE INCLUDED WITH THE DRAWINGS IN THE CONTRACT DOCUMENT.
4. DO NOT SCALE DRAWINGS

CUNLIFFE & ASSOCIATES
CONSULTING STRUCTURAL ENGINEERS
200-1550 CARLING AVE
OTTAWA, ONTARIO
CANADA K1Z 8S8
T: 613-729-7242
F: 613-728-1461
E: cunliffe@cunliffe.ca
W: www.cunliffe.ca

PROJECT
CITYSCAPE COMMERCIAL WAREHOUSE

ARCHITECT
S.J. LAWRENCE ARCHITECT INCORPORATED

DRAWING TITLE
GENERAL NOTES & TYPICAL DETAILS

DRAWN	REVIEWED	SCALE
G.N.	R.I.C.	NOT TO SCALE

ENGINEERS SEAL

PROJECT No.
20-094

SHEET No.
S01

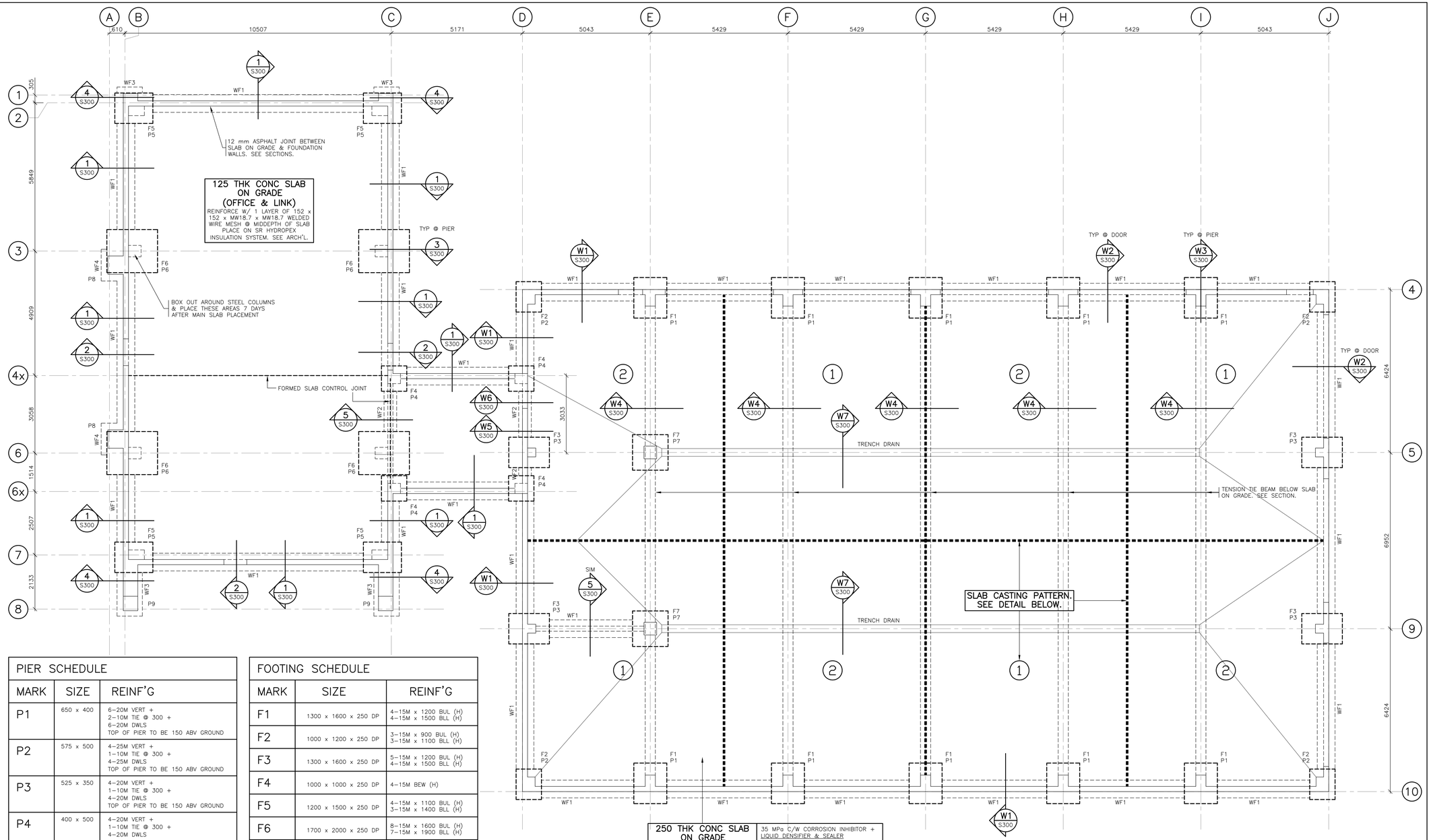

PIER SCHEDULE		
MARK	SIZE	REINF'G
P1	650 x 400	6–20M VERT + 2–10M TIE @ 300 + 6–20M DWLS TOP OF PIER TO BE 150 ABV GROUND
P2	575 x 500	4–25M VERT + 1–10M TIE @ 300 + 4–25M DWLS TOP OF PIER TO BE 150 ABV GROUND
P3	525 x 350	4–20M VERT + 1–10M TIE @ 300 + 4–20M DWLS TOP OF PIER TO BE 150 ABV GROUND
P4	400 x 500	4–20M VERT + 1–10M TIE @ 300 + 4–20M DWLS
P5	830 x 580	6–25M VERT + 2–10M TIE @ 300 + 6–25M DWLS
P6	700 x 450	6–20M VERT + 2–10M TIE @ 300 + 6–20M DWLS
P7	500 x 500	4–25M VERT + 1–10M TIE @ 300 + 4–25M DWLS TOP OF PIER TO BE 150 ABV GROUND
P8	813 x 722 SEE ARCH'L	6–25M VERT + 2–10M TIE @ 300 + 6–25M DWLS TOP OF PIER TO BE MATCH GROUND FLR
P9	570 x 570	4–25M VERT + 1–10M TIE @ 300 + 4–25M DWLS TOP OF PIER TO BE MATCH GROUND FLR

NOTES:
1. PROVIDE DWLS INTO FTG TO MATCH VERT. PIER REINF'G
2. PROVIDE 3 SETS OF TIES SPACED @ 75 o/c AT TOP OF PIERS.
3. HORIZ FND WALL REINF'G TO EXTEND THRU CONCRETE PIER.
4. TOP OF PIER TO BE 300 BELOW TOP OF SLAB TYP. U/N
5. SEE PLANS FOR CONCRETE COMPRESSIVE STRENGTHS.

FOOTING SCHEDULE		
MARK	SIZE	REINF'G
F1	1300 x 1600 x 250 DP	4–15M x 1200 BUL (H) 4–15M x 1500 BLL (H)
F2	1000 x 1200 x 250 DP	3–15M x 900 BUL (H) 3–15M x 1100 BLL (H)
F3	1300 x 1600 x 250 DP	5–15M x 1200 BUL (H) 4–15M x 1500 BLL (H)
F4	1000 x 1000 x 250 DP	4–15M BEW (H)
F5	1200 x 1500 x 250 DP	4–15M x 1100 BUL (H) 3–15M x 1400 BLL (H)
F6	1700 x 2000 x 250 DP	8–15M x 1600 BUL (H) 7–15M x 1900 BLL (H)
F7	1400 x 1400 x 250 DP	4–15M BEW (H)
WF1	700 x 250 DP	3–15M BOT CONT.
WF2	500 x 250 DP	2–15M BOT CONT.
WF3	1000 x 300 DP	3–15M BOT CONT.
WF4	1250 x 300 DP	4–15M BOT CONT.

NOTES:
1. SEE GENERAL NOTES ALSO.
2. ALL FOOTINGS TO BE CENTERED UNDER PIERS, COLUMNS OR WALLS UNLESS NOTED.
3. WALL FOOTINGS TO EXTEND BEYOND ENDS OF WALLS A DISTANCE EQUAL TO THE SIDE PROJECTIONS.
4. SEE PLANS FOR CONCRETE COMPRESSIVE STRENGTHS.

250 THK CONC SLAB ON GRADE (WAREHOUSE)
REINFORCED W/
15M'S @ 400 TOP AND BOTTOM EACH WAY
PLACE ON SR HYDROPEX INSULATION SYSTEM. SEE ARCH'L. SEE CASTING PATTERN ALSO.
REFER TO ARCH'L FOR SLOPES AND DRAIN LOCATIONS
NO SAWCUTS PERMITTED

35 MPa C/W CORROSION INHIBITOR + LIQUID DENSIFIER & SEALER
EUCO DIAMOND HARD FLOOR HARDENER
SURFLEX TR
NOTE:
FOLLOW MANUFACTURERS INSTALLATION & CURING INSTRUCTIONS. CONCRETE SLAB MIX TO CONTAIN A CORROSION INHIBITOR OF NOT LESS THAN 10 L/m³ OF 30% SOLUTION OF CALCIUM NITRATE.

CONCRETE COMPRESSIVE STRENGTH
FOOTINGS – 25 MPa TYPE N
FOUNDATION WALL & PIERS – 25 MPa TYPE F2 (OFFICE & LINK)
SLAB ON GRADE – 25 MPa TYPE N (OFFICE & LINK)
TENSION TIES BEAMS IN GARAGE – 30 MPa F1
FOUNDATION WALLS & PIER IN WAREHOUSE – 30 MPa F1

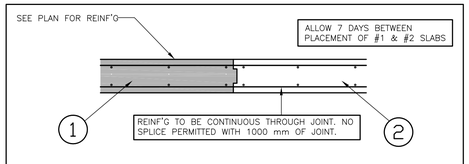

SECTION @ SLAB CASTING PATTERN

No.	Revision Description	Date
1	ISSUE FOR PRELIMINARY PRICING	JAN 15/21

1. THE CONTRACTOR IS RESPONSIBLE FOR CHECKING AND VERIFYING ALL DIMENSIONS. ANY DISCREPANCY SHALL BE REPORTED TO THE ENGINEER.
2. THIS DRAWING IS TO BE READ IN CONJUNCTION WITH ALL MATERIAL RELEVANT TO THE PROJECT.
3. ADDITIONAL INFORMATION MAY BE ISSUED FOR CLARIFICATION TO ASSIST PROPER EXECUTION OF WORK. SUCH DRAWINGS WILL HAVE THE SAME MEANING AND INTENT AS IF THEY WERE INCLUDED WITH THE DRAWINGS IN THE CONTRACT DOCUMENT.
4. DO NOT SCALE DRAWINGS

CUNLIFFE & ASSOCIATES
CONSULTING STRUCTURAL ENGINEERS
200–1550 CARLING AVE
OTTAWA, ONTARIO
CANADA K1Z 8S8
T: 613–729–7242
F: 613–728–1461
E: cunliffe@cunliffe.ca
W: www.cunliffe.ca

PROJECT
CITYSCAPE COMMERCIAL WAREHOUSE

ARCHITECT
S.J. LAWRENCE ARCHITECT INCORPORATED

DRAWING TITLE
GROUND FLOOR/ FOUNDATION PLAN

DRAWN	REVIEWED	SCALE
G.N.	R.J.C.	1:75

ENGINEERS SEAL

PROJECT No. 20-094

SHEET No. S100

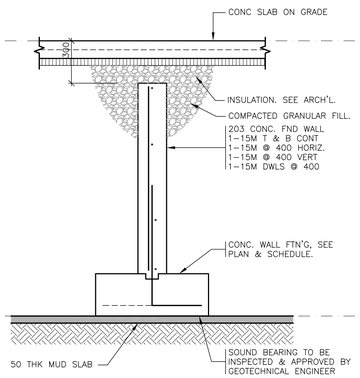

5 S100 SECTION
1 : 20

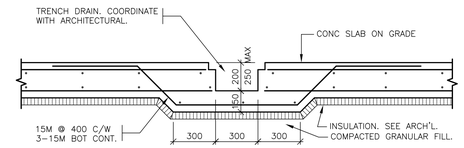

W7 S100 SECTION
1 : 20

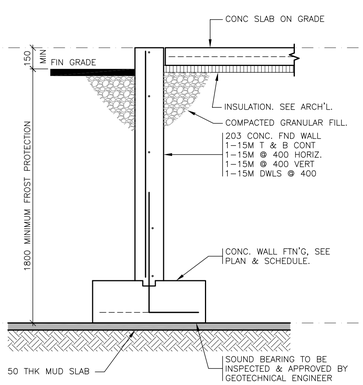

1 S100 SECTION
1 : 20

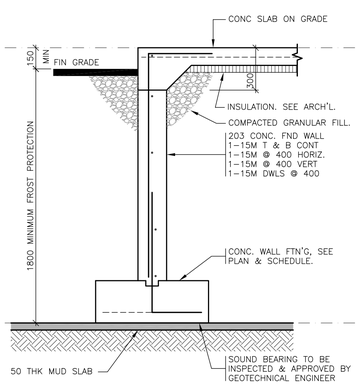

2 S100 SECTION
1 : 20

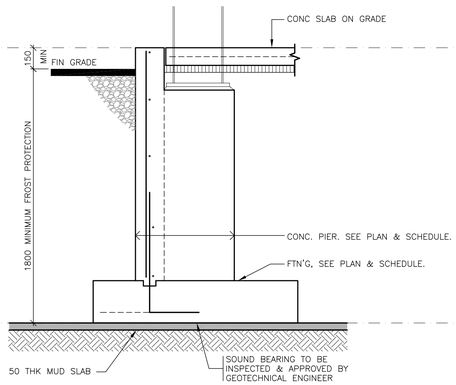

3 S100 SECTION
1 : 20

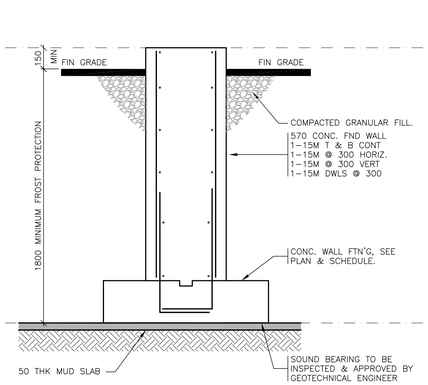

4 S100 SECTION
1 : 20

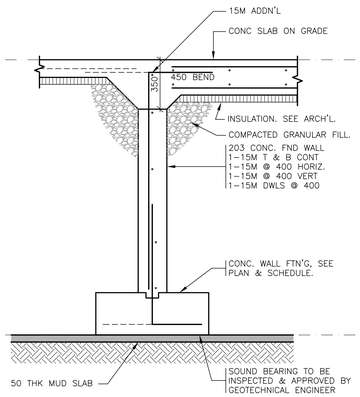

W6 S100 SECTION
1 : 20

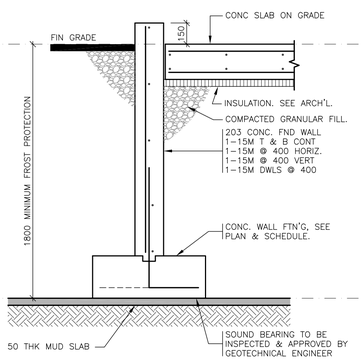

W1 S100 SECTION
1 : 20

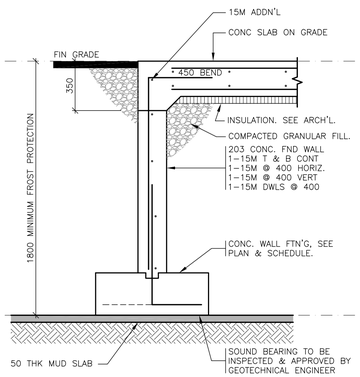

W2 S100 SECTION
1 : 20

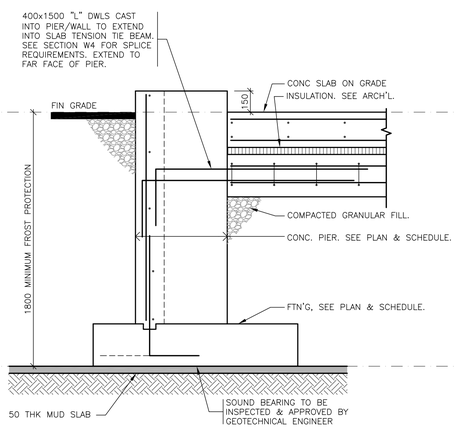

W3 S100 SECTION
1 : 20

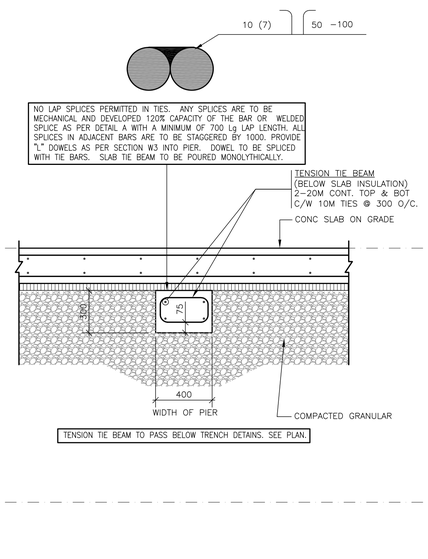

W4 S100 SECTION
1 : 20

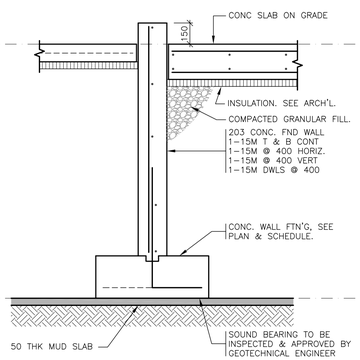

W5 S100 SECTION
1 : 20

No.	Revision Description	Date
1	ISSUE FOR PRELIMINARY PRICING	JAN 15/21

1. THE CONTRACTOR IS RESPONSIBLE FOR CHECKING AND VERIFYING ALL DIMENSIONS. ANY DISCREPANCY SHALL BE REPORTED TO THE ENGINEER.
2. THIS DRAWING IS TO BE READ IN CONJUNCTION WITH ALL MATERIAL RELEVANT TO THE PROJECT.
3. ADDITIONAL INFORMATION MAY BE ISSUED FOR CLARIFICATION TO ASSIST PROPER EXECUTION OF WORK. SUCH DRAWINGS WILL HAVE THE SAME MEANING AND INTENT AS IF THEY WERE INCLUDED WITH THE DRAWINGS IN THE CONTRACT DOCUMENT.
4. DO NOT SCALE DRAWINGS

CUNLIFFE & ASSOCIATES
CONSULTING STRUCTURAL ENGINEERS
200-1550 CARLING AVE
OTTAWA, ONTARIO
CANADA K1Z 8S8
T: 613-729-7242
F: 613-728-1461
E: cunliffe@cunliffe.ca
W: www.cunliffe.ca

PROJECT
CITYSCAPE COMMERCIAL WAREHOUSE

ARCHITECT
S.J. LAWRENCE ARCHITECT INCORPORATED

DRAWING TITLE
SECTIONS

DRAWN	REVIEWED	SCALE
G.N.	R.I.C.	1:20

ENGINEERS SEAL

PROJECT No.
20-094

SHEET No.
S300