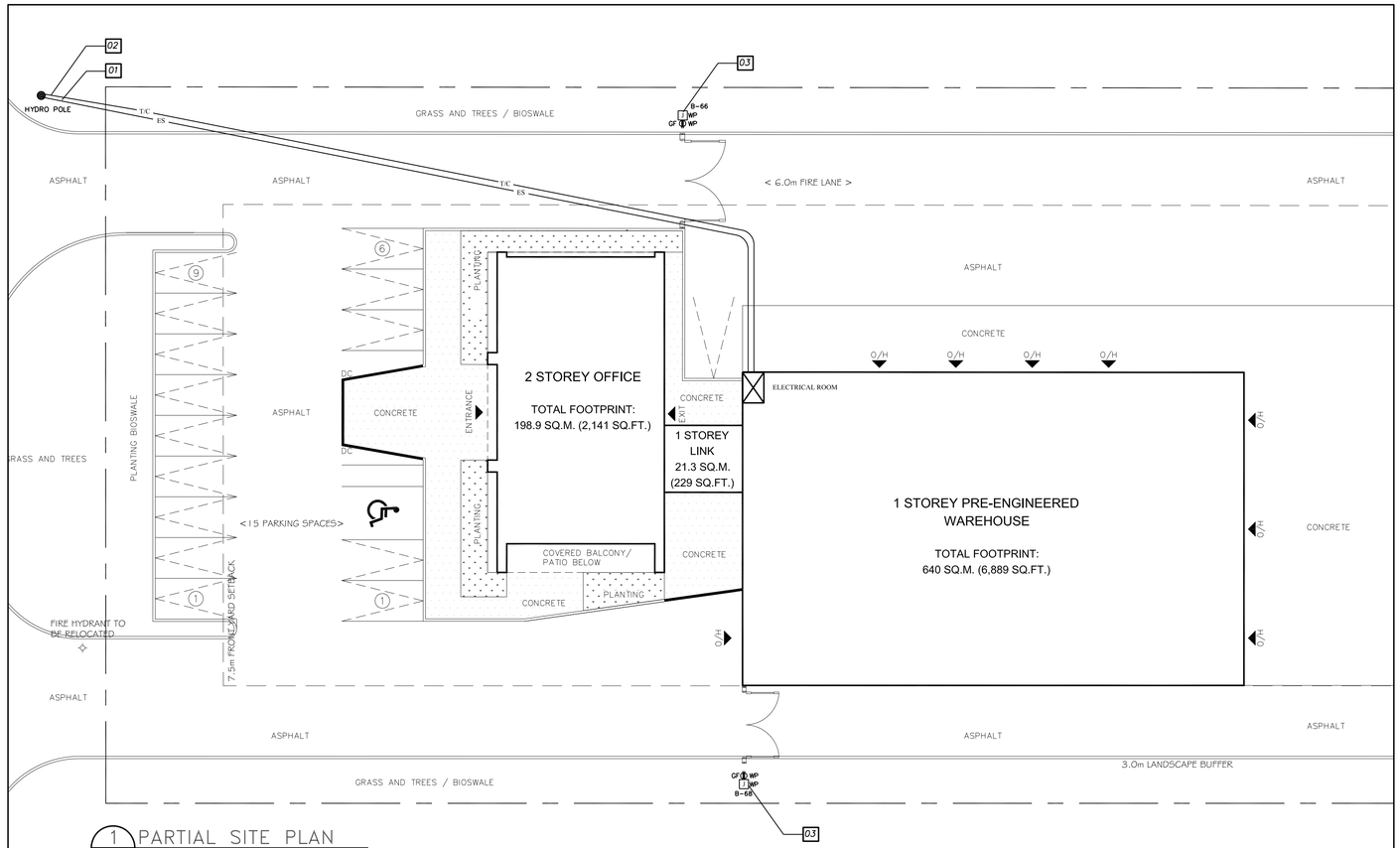

1 PARTIAL SITE PLAN
E1 SCALE: 1: 200

Electrical Notes

01 PROVIDE 200A 347/600V UNDERGROUND SERVICE FROM HYDRO POLE IN COORDINATION WITH REMOVAL OF EXISTING. PROVIDE 100mm CONCRETE ENCASED RIGID PVC DUCTS WITH LONG RADIUS BENDS TO ELECTRICAL ROOM. INCLUDE FOR ROAD CUT AND ALL PERMITS.

02 CONTRACTOR TO PROVIDE 2x100mm PVC DUCT FROM EXISTING POLE FOR TELEPHONE/TV SERVICES AND SPARE.

03 PROVIDE POWER DEDICATED CIRCUITS 120V,1ø, 60Hz, 20A – 25ømm PVC CONDUIT FOR EACH SITE SECURITY GATES. EXACT LOCATIONS SHALL BE COORDINATED ON SITE PRIOR TO FINAL INSTALLATIONS (TYPICAL OF 2).

Site Plan Electrical Legend

SYMBOL	DESCRIPTION
NEW	
—ES—	SECONARY MAIN ELCTRICAL SERVICE (B) = BURIED, (OH) = OVERHEAD
—HV—	HIGH VOLTAGE ELECTRICAL SERVICE 3 x 100mm PVC CONDUIT (B) = BURIED, (OH) = OVERHEAD
—E—	ELECTRICAL MAIN FEEDER OR BRANCH CIRCUIT (B) = BURIED, (OH) = OVERHEAD
—T—	TELEPHONE 100mm PVC CONDUIT (B) = BURIED, (OH) = OVERHEAD
—C—	CABLE 100mm PVC CONDUIT (B) = BURIED, (OH) = OVERHEAD
E	ELECTRIC METER
C	CABLE PEDESTAL
T	BELL PEDESTAL
MH	MAN HOLE
LS	POST TOP LIGHT FIXTURE, REFER TO SPECIFICATIONS
U.P.	UTILITY POLE
J	WALL MOUNT LIGHT FIXTURE
	PADMOUNT TRANSFORMER

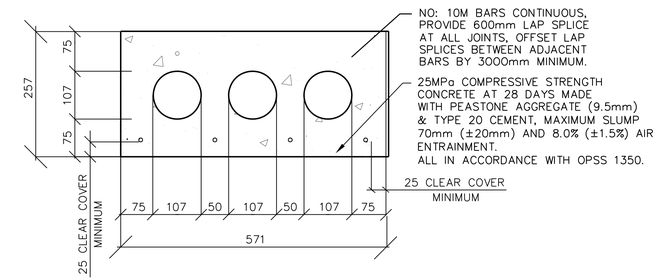

2 TYPICAL THREE DUCT STRUCTURAL
E-1 SCALE: N.I.S.

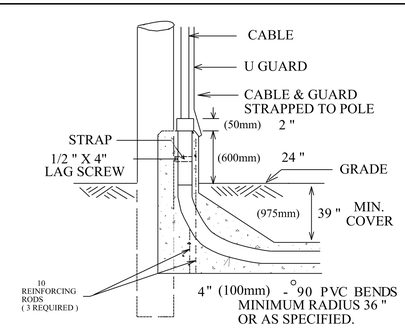

3 HYDRO POLE LATERAL WITH GUARD
E-1 SCALE: N.I.S.

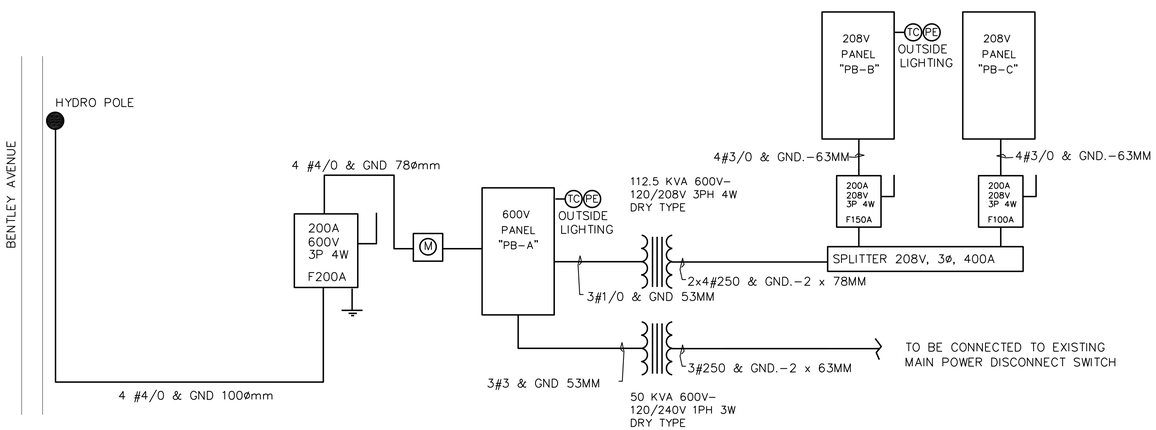

4 ELECTRICAL POWER SINGLE LINE DIAGRAM
E1 SCALE: N.T.S.

Antares Engineering Group Inc.
Professional Mechanical, Electrical, Testing and Research Engineers
38 Sachs Forest Place, Ottawa, Ontario, K2E 7J4
Phone (613) 723-6034; e-mail: mail@antaresengineering.ca

NO.	DESCRIPTION	
3.	ISSUED FOR TENDER	15/01/2021
2.	TENDER FOR PRE-ENG. BUILDING STRUCTURE - ONLY	14/12/2020
1.	ISSUED FOR HYDRO REVIEW	19/10/2020

REVISIONS

CONTRACTOR SHALL CHECK AND VERIFY ALL DIMENSIONS AND REPORT ANY OMISSIONS OR DISCREPANCIES TO THE ENGINEER BEFORE PROCEEDING WITH THE WORK

DO NOT SCALE DRAWINGS

THIS DRAWING SHALL NOT BE USED FOR CONSTRUCTION PURPOSES UNTIL SIGNED BY THE ENGINEER

DATE JYLY 2020

DRAWN S.S.

DATE JULY 2020

CHECKED J.C.J.

ISSUED 15 JULY 2020

CONSULTANT

CONSULTANT

S.J. LAWRENCE ARCHITECTURAL I n c.
18 DEAKING STREET SUITE 205 NEPEAN, ,ONTARIO K2E 8B7
TEL (613) 739 7770 e-mail; brandon@sjarchitect.com

PROJECT

CITYSCAPE COMMERCIAL WAREHOUSE

144 BENTLEY AVENUE OTTAWA,ONTARIO

DRAWING

ELECTRICAL SITE PLAN

SCALE AS SHOWN

SHEET E-1

PROJ. NO. AEG 20-727

REV.

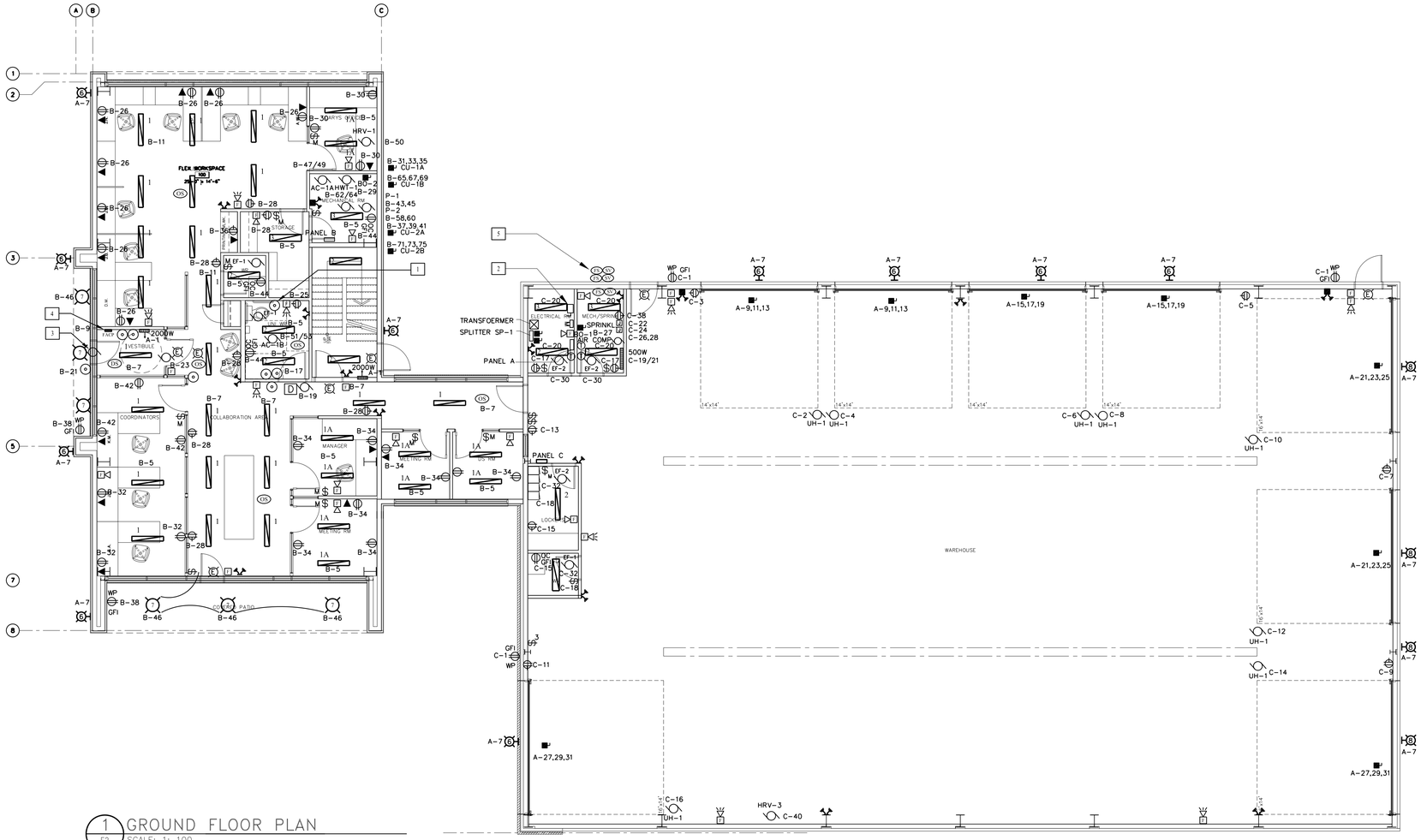

1 GROUND FLOOR PLAN
E2 SCALE: 1: 100

ELECTRICAL LEGEND:

SYMBOL	DESCRIPTION
	CEILING MOUNTED 2'X4' LIGHT FIXTURE
	CEILING MOUNTED 1'X4' LIGHT FIXTURE
	CEILING MOUNTED 2'X2' LIGHT FIXTURE
	CEILING MOUNTED SPOT LIGHT FIXTURE
	WALL MOUNTED LIGHT FIXTURE
	EMERGENCY BATTERY UNIT COMPLETE WITH ADJACENT RECEPTACLE MOUNTING BRACKET AND HEADS AS SHOWN, 12V, 12W, MICRO QUARTZ
	EMERGENCY BATTERY REMOTE HEADS, 12V, 12W, MICRO QUARTZ
$	SINGLE POLE SWITCH M = MOTION SENSOR
$3	THREE WAY SWITCH
DS	DAYLIGHT/OCUPANCY SENSOR
OS	OCCUPANCY SENSOR
	DUPLEX RECEPTACLE GF = GROUND FAULT OC = OVER COUNTER
	DIRECT CONNECTION
	15/20A DUPLEX RECEPTACLE
	SEPARATE CIRCUIT RECEPTACLE
OC	15/20A OVER COUNTER DUPLEX RECEPTACLE
	15/20A OVER COUNTER DUPLEX RECEPTACLE
T	THERMOSTAT BY DIV. 16
	WALL MOUNTED TELECOMMUNICATION/ DATA OUTLET
	STARTER BY THIS DIVISION
U/F	DISCONNECT SWITCH U/F DENOTES UN FUSED
	MOTOR CONNECTION 1PH OR 3PH, REFER TO NOTES
	WALL MOUNTED POWER DISTRIBUTION PANEL
	CABLE TV OUTLET
	DISTRIBUTION EQUIPMENT REFER TO NOTES
	BASEBOARD HEATER
	FORCE FLOW HEATER
J	DISTRIBUTION JUNCTION BOX
	CEILING MOUNTED EXIT SIGN
	WALL MOUNTED EXIT SIGN
TR	FLOOR MOUNTED DRY TYPE POWER TRANSFORMER
P/D	POWER/DATA SERVICE POLE CEILING TO WORK STATION
FACP	FIRE ALARM CONTROL PANEL
	FIRE ALARM HEAT DETECTOR
	FIRE ALARM SMOKE DETECTOR
F	FIRE ALARM MINI HORN/STROBE
F	FIRE ALARM MINI HORN
F	FIRE ALARM PULL STATION
SV	FIRE ALARM SUPERVISORY VALVE
FS	FIRE ALARM FLOW SWITCH
D	DURESS ALARM INDICATOR
	PUSH BUTTON, REFER TO NOTES
PC	PHOTOCELL
TC	TIME CLOCK
	CCTV CAMERA
CR	CARD READER
REX	REQUEST TO EXIT
	DOOR CONTACTS
ES	ELECTRIC STRIKE
KP	KEY PAD
GB	GLASS BREAK
MD	MOTION DETECTOR

NOTES:

1. DOOR OPERATOR CONNECTION AND EMERGENCY CALL KIT C/W DOOR LOCK SYSTEM, PROVIDE AND MAKE CONNECTION TO PUSH BUTTON, TRANSFORMER, HORN/STROBES FOR COMPLETE SYSTEM. PROVIDE ALL BOXES, CONDUITS AND WIRING FOR EMERGENCY PUSH BUTTON (SINGLE GANG), HORN/STROBE OUTSIDE OF DOOR (100MM BOX), PROVIDE 21 MM CONDUIT FROM EMERGENCY PUSH BUTTON TO DOME LIGHTS, LOCK AND DOOR CONTROLS. DEVICE BY HARDWARE. CO-ORDINATE LOCATIONS WITH ARCHITECTURAL DRAWING.
2. NEW SERVICE ENTRANCE, REFER TOP SINGLE LINE.
3. AUTOMATIC DOOR OPERATOR, PROVIDE ALL ROUGH-IN TO REMOTE OPERATORS.
4. PROVIDE FIRE ALARM SYSTEM AND MAKE ALL CONNECTIONS TO SPRINKLER SYSTEM AND REMOTE MONITORING AGENCY.
5. COORDINATE FLOW AND TAMPER SWITCH WITH MECHANICAL AND INCLUDE FOR ALL VERIFICATION.

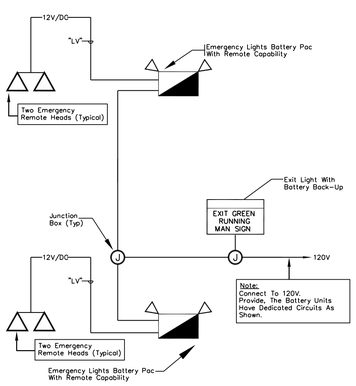

TYPICAL EXIT AND EMERGENCY LIGHTING CONNECTION DETAIL

NOT TO SCALE

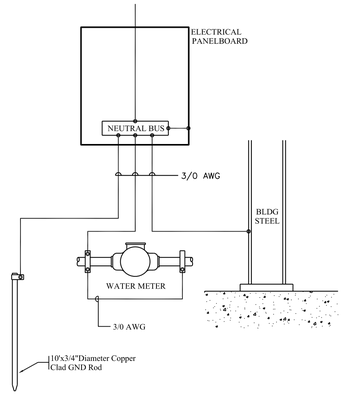

GROUNDING & BONDING DETAIL

NOT TO SCALE

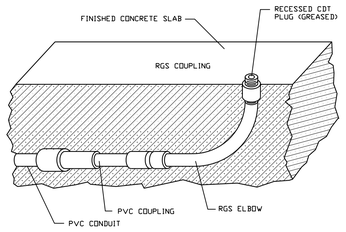

INSTALLATION OF PVC CONDUIT EMERGING FROM CONCRETE SLAB

NOT TO SCALE

Antares Engineering Group Inc.
Professional Mechanical, Electrical, Testing and Research Engineers
38 Sachs Forest Place, Ottawa, Ontario, K2E 7J4
Phone (613) 723-6034; e-mail: mail@antarasengineering.ca

NO.	DESCRIPTION	
3.	ISSUED FOR TENDER	15/01/2021
2.	TENDER FOR PRE-ENG. BUILDING STRUCTURE -ONLY	14/12/2020
1.	ISSUED FOR CLIENT REVIEW	15/11/2020

REVISIONS

CONTRACTOR SHALL CHECK AND VERIFY ALL DIMENSIONS AND REPORT ANY OMISSIONS OR DISCREPANCIES TO THE ENGINEER BEFORE PROCEEDING WITH THE WORK

DO NOT SCALE DRAWINGS

THIS DRAWING SHALL NOT BE USED FOR CONSTRUCTION PURPOSES UNTIL SIGNED BY THE ENGINEER

DATE: JYLY 2020

DRAWN: S.S.

DATE: JULY 2020

CHECKED: J.C.J.

ISSUED: 15 JULY 2020

CONSULTANT

CONSULTANT

S.J. LAWRENCE ARCHITECTURAL I n c.
18 DEAKING STREET SUITE 205 NEPEAN, ONTARIO K2E 8B7
TEL (613) 739 7770 e-mail; brandon@sjarchitect.com

PROJECT

CITYSCAPE COMMERCIAL WAREHOUSE

144 BENTLEY AVENUE OTTAWA,ONTARIO

DRAWING

ELECTRICAL
GROUND FLOOR LAYOUT & LEGEND

SCALE: AS SHOWN

PROJ. NO.: AEG 20-727

SHEET: E-2

REV.

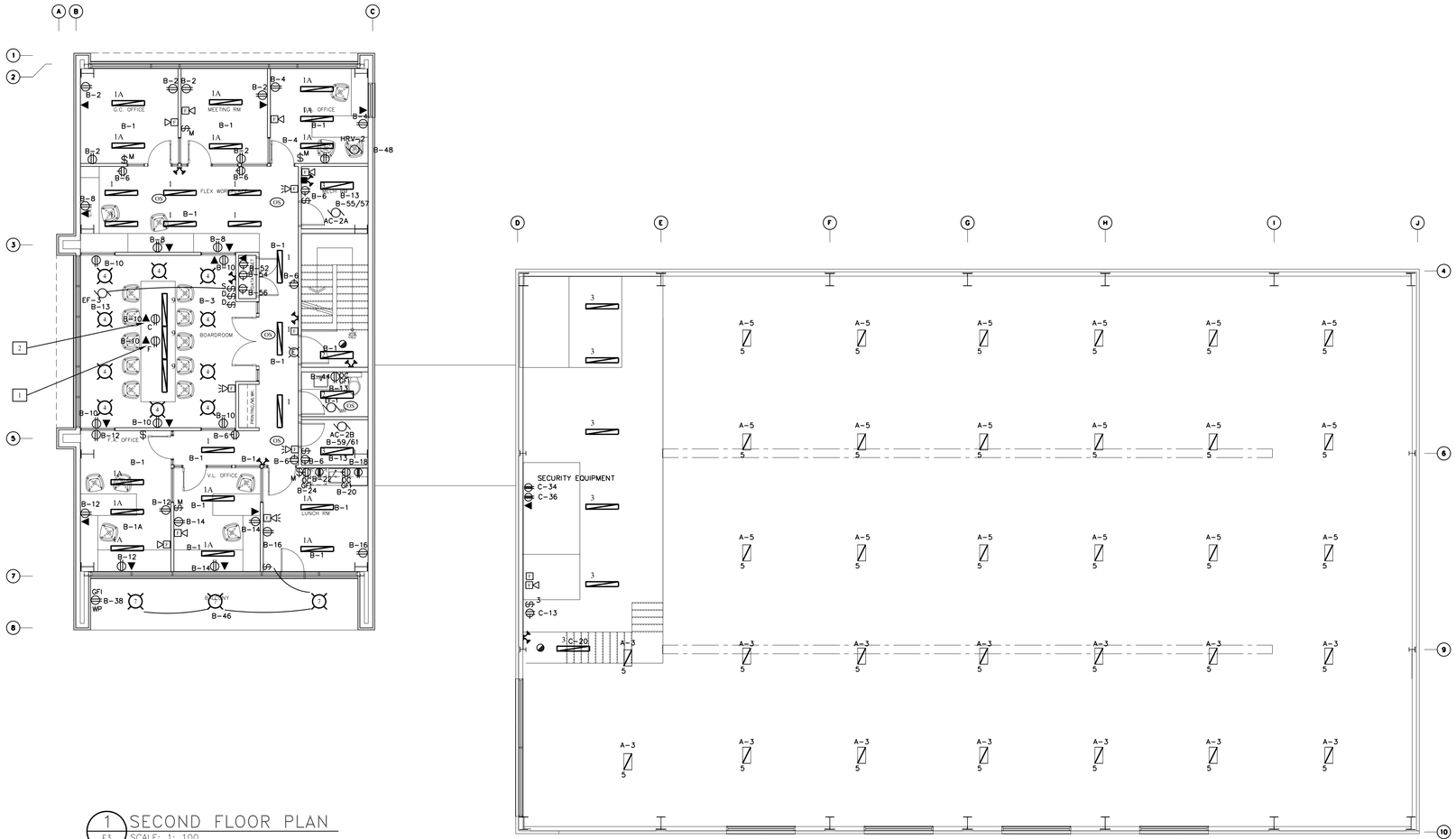

1 SECOND FLOOR PLAN
E3 SCALE: 1: 100

NOTES:

1. PROVIDE 53 MM CONDUITS FROM FLOOR BOX TO WALL MONITOR, A/V WIRING BY A/V CONTRACTOR.
2. PROVIDE 21 MM CONDUITS FROM CEILING PROJECTOR TO WALL MONITOR, A/V WIRING BY A/V CONTRACTOR.

PANEL BOARD SCHEDULE# A

VOLTS: 600V,3ø,4W,AMPS: 100
No. OF CIRCUITS: 42
TYPE: BREAKER ☒,FUSE ☐
SURFACE ☒,FLUSH ☐

FORCE FLOW HEATER	30	01	02		112.5 KVA, 3ø TRANSFORMER
WAREHOUSE LIGHTING	15	03	04		
WAREHOUSE LIGHTING	15	05	06	140	
EXTERIOR LIGHTING	15	07	08		50 KVA, 1ø TRANSFORMER
	15	09	10		
GARAGE DOOR MOTOR		11	12		
GARAGE DOOR MOTOR		13	14	60	
	15	15	16		
GARAGE DOOR MOTOR		17	18		
GARAGE DOOR MOTOR		19	20	15	
	15	21	22		
GARAGE DOOR MOTOR		23	24		
GARAGE DOOR MOTOR		25	26	15	
	15	27	28	15	
GARAGE DOOR MOTOR		29	30		
GARAGE DOOR MOTOR		31	32		
	15	33	34		
		35	36	15	
		37	38	30	
		39	40		
		41	42		
				15	

PANEL BOARD SCHEDULE# C

VOLTS: 208V,3ø,4W,AMPS: 100
No. OF CIRCUITS: 42
TYPE: BREAKER ☒,FUSE ☐
SURFACE ☒,FLUSH ☐

OUTSIDE RECEPTACLES	20	01	02	15	UNIT HEATER
WARHOUSE RECEPTACLE	15	03	04	15	UNIT HEATER
WARHOUSE RECEPTACLE	15	05	06	15	UNIT HEATER
WARHOUSE RECEPTACLE	15	07	08	15	UNIT HEATER
WARHOUSE RECEPTACLE	15	09	10	15	UNIT HEATER
WARHOUSE RECEPTACLE	15	11	12	15	UNIT HEATER
WARHOUSE RECEPTACLE	15	13	14	15	UNIT HEATER
LOCKER & WC RECEPT.	15	15	16	15	UNIT HEATER
ELECTR./MECH ROOM RECEP.	15	17	18	15	WR/LOCK LIGHTING
		19	20	15	ELECTR./MECH LGHT.
BASEBOARD HEATER	15	21	22	15	SPRINKLERS
		23	24	15	SPRINKLERS
SPARE	15	25	26	15	JOCKEY PUMP
		27	28	20	AIR COMPERESSOR
SPARE	15	29	30	20	MECH RM. EXHAUST FANS
		31	32	15	LOCKER AREA EXHAUST FANS
SPARE	30	33	34	20	SECURITY EQUIPMENT
		35	36	15	SECURITY EQUIPMENT
		37	38	15	IRRIGATION RECEPTACLE
SPARE	15	39	40	15	HRV-3
SPARE	15	41	42	15	SPARE
		43	44		SPARE
SPARE	15	45	46	15	SPARE
SPARE	15	47	48	15	SPARE

NOTES

Lighting Fixture Schedule

REF. NUMBER	TYPE	MANUFACTURER & MODEL	LOCATION	POSITION	MOUNTING	FIXTURE		LAMP		VOLTS	NOTES
						COLOR TEMP	LUMENS	TYPE	WATTS		
1	1 x 4 LINEAR OFFICE STRIP	LEDALITE 290X1LSDLN	INTERIOR	CEILING	SUSPENDED	3500	4035	LED	43	120	
1A	1 x 4 LINEAR OFFICE STRIP	LEDALITE 290X1LSDQN	INTERIOR	CEILING	SUSPENDED	3500	3900	LED	43	120	
2	1 x 4 WRAPAPROUND	LITHONIA FMLWL SERIES	INTERIOR	CEILING	SURFACE	3500	3000	LED	28	120	
3	1 x 4 STRIP	LITHONIA H-6431 SERIES	INTERIOR	CEILING	SURFACE	3500	3000	LED	24	120	
4	DRUM LIGHT	LIGHTOLIER C4-DL10835MZ10UCL	INTERIOR	CEILING	SUSPENDED	3500	1066	LED	11	120	
5	2 X 4 HIGH BAY LIGHT	DAY-BRITE FCY15L8CST-UNV-DIM	INTERIOR	CEILING	SUSPENDED	3500	14488	LED	107	347	
6	WALL PACK	KEENE - LPW-16-30-NW-G3-4	EXTERIOR	WALL	SURFACE	3500	3000	LED	34	347	
7	EXTERIOR DRUM LIGHT	LIGHTOLIER C4-DL15835MZ10UCL	EXTERIOR	CEILING	SURFACE	3500	1500	LED	18	120	
8	WALL PACK	KEENE - LPW-32-50-NW-G3-4-UNV-EBP (NORMAL MODE)	EXTERIOR	WALL	SURFACE	3500	5000	LED	54	347	
9	1 x 4 LINEAR MEETING STRIP	LEDALITE 290X1LSDLN	INTERIOR	CEILING	SUSPENDED	3500	4035	LED	43	120	

Antares Engineering Group Inc.
Professional Mechanical, Electrical, Testing and Research Engineers
38 Sachs Forest Place, Ottawa, Ontario, K2E 7J4
Phone (613) 723-6034; e-mail: mail@antaresengineering.ca

NO.	DESCRIPTION	
3.	ISSUED FOR TENDER	15/01/2021
2.	TENDER FOR PRE-ENG. BUILDING STRUCTURE - ONLY	14/12/2020
1.	ISSUED FOR CLIENT REVIEW	15/11/2020

REVISIONS

CONTRACTOR SHALL CHECK AND VERIFY ALL DIMENSIONS AND REPORT ANY OMISSIONS OR DISCREPANCIES TO THE ENGINEER BEFORE PROCEEDING WITH THE WORK

DO NOT SCALE DRAWINGS

THIS DRAWING SHALL NOT BE USED FOR CONSTRUCTION PURPOSES UNTIL SIGNED BY THE ENGINEER

DATE JYLY 2020

DRAWN S.S.

DATE JULY 2020

CHECKED J.C.J.

ISSUED 15 JULY 2020

CONSULTANT

CONSULTANT

S.J. LAWRENCE ARCHITECTURAL I n c.
18 DEAKING STREET SUITE 205 NEPEAN, ,ONTARIO K2E 8B7
TEL (613) 739 7770 e-mail; brandon@sjarchitect.com

PROJECT

CITYSCAPE COMMERCIAL WAREHOUSE

144 BENTLEY AVENUE OTTAWA,ONTARIO

DRAWING

ELECTRICAL
SECOND FLOOR LAYOUT

SCALE AS SHOWN

PROJ. NO. AEG 20-727

SHEET E-3

REV.

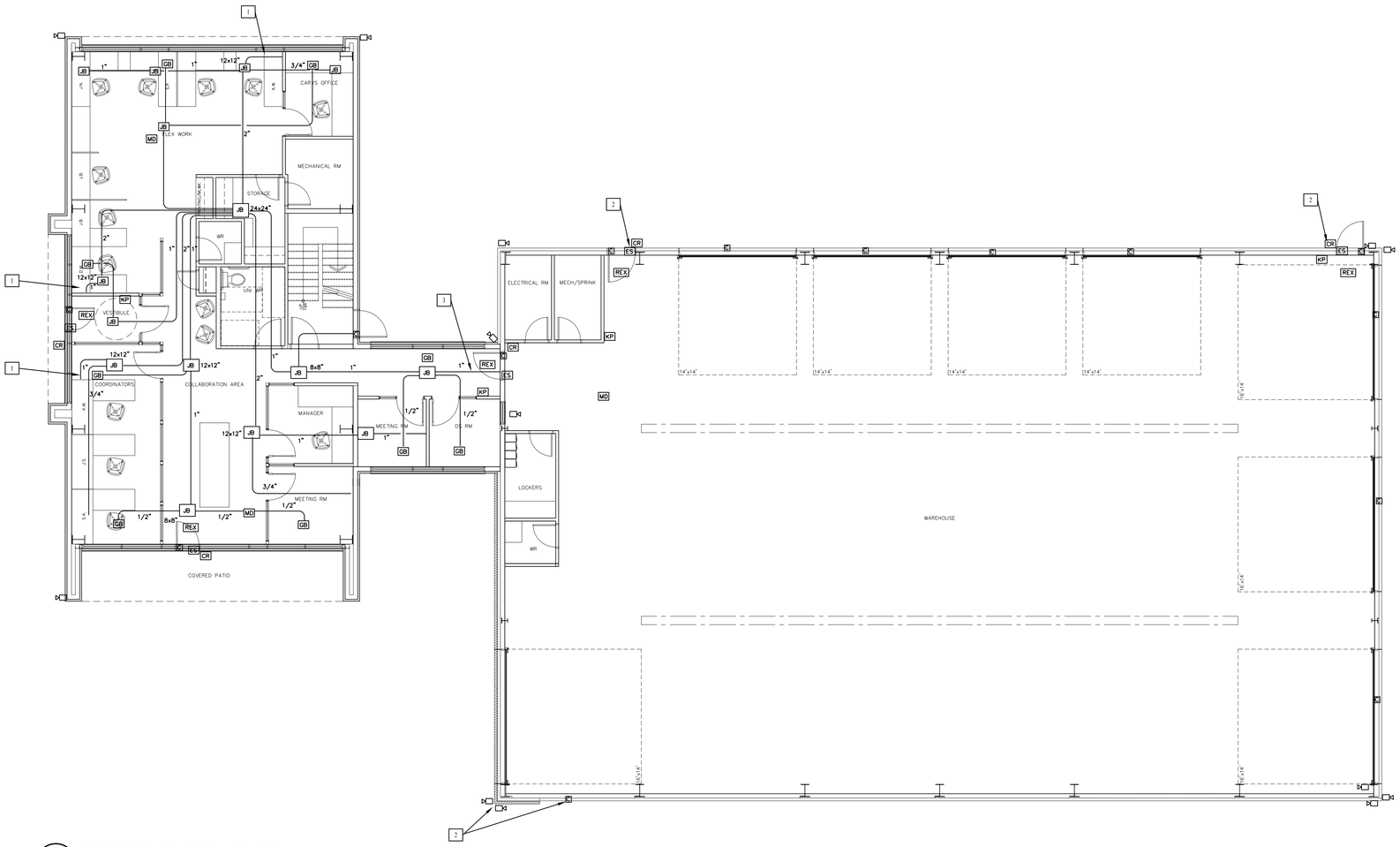

1 GROUND FLOOR PLAN
E4 SCALE: 1:100

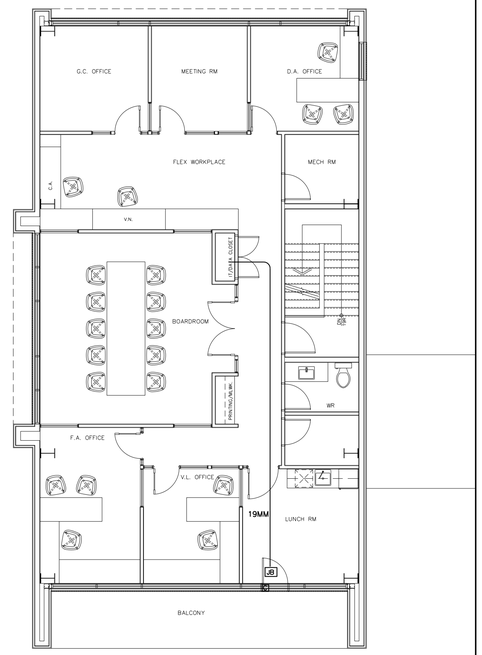

2 SECOND FLOOR PLAN
E4 SCALE: 1:100

NOTES:

1. PROVIDE 1" CONDUITS AND STUB DOWN TO FURNITURE. COORDINATE ALL ACTIVITIES WITH SECURITY SUPPLIER. PROVIDE ALL ROUGH-IN BOXES AND MATERIALS
2. TYPICAL: PROVIDE SEPARATE 3/4" EMT CONDUITS FROM WAREHOUSE CCTV & ACCESS CONTROL DEVICES TO MEZZANINE SECURITY.
3. PROVIDE 1" CONDUITS TO MEZZANINE SECURITY SYSTEM

GENERAL NOTE:

ALL BUILDING SECURITY WORK REQUIREMENTS AND RELATED DEVICES LOCATIONS MUST BE COORDINATED BETWEEN ELECTRICAL CONTRACTOR AND SECURITY SUPLIER/INSTALLER PRIOR TO FINAL INSTALLATION OF SECURITY DISTRIBUTION SYSTEM (TYPICAL).

Antares Engineering Group Inc.
Professional Mechanical, Electrical, Testing and Research Engineers
38 Sachs Forest Place, Ottawa, Ontario, K2E 7J4
Phone (613) 723-6034; e-mail: mail@antaresengineering.ca

NO.	DESCRIPTION	
3.	ISSUED FOR TENDER	15/01/2021
2.	TENDER FOR PRE-ENG. BUILDING STRUCTURE - ONLY	14/12/2020
1.	ISSUED FOR CLIENT REVIEW	15/11/2020

REVISIONS

CONTRACTOR SHALL CHECK AND VERIFY ALL DIMENSIONS AND REPORT ANY OMISSIONS OR DISCREPANCIES TO THE ENGINEER BEFORE PROCEEDING WITH THE WORK

DO NOT SCALE DRAWINGS

THIS DRAWING SHALL NOT BE USED FOR CONSTRUCTION PURPOSES UNTIL SIGNED BY THE ENGINEER

DATE JYLY 2020

DRAWN S.S.

DATE JULY 2020

CHECKED J.C.J.

ISSUED 15 JULY 2020

CONSULTANT

CONSULTANT

S.J. LAWRENCE ARCHITECTURAL I n c.
18 DEAKING STREET SUITE 205 NEPEAN, ,ONTARIO K2E 8B7
TEL (613) 739 7770 e-mail; brandon@sjarchitect.com

PROJECT

CITYSCAPE COMMERCIAL WAREHOUSE

144 BENTLEY AVENUE OTTAWA,ONTARIO

DRAWING

ELECTRICAL
SECURITY CONDUIT INFRASTRUCTURE

SCALE AS SHOWN

PROJ. NO. AEG 20-727

SHEET E-4

REV.

ELECTRICAL SPECIFICATIONS:

1. COMPLY WITH THE REQUIREMENTS OF THE INSTRUCTIONS TO BIDDERS, THE GENERAL CONDITIONS OF THE CONTRACT AND THE SUPPLEMENTARY GENERAL CONDITIONS INCLUDED IN THE TENDER DOCUMENTS.

2. CONTRACTOR SHALL FOLLOW THE BIDDING DOCUMENT PROJECT SCHEDULE. UPON AWARD, CONTRACTOR SHALL SUBMIT WORK SCHEDULE AND EQUIPMENT DELIVERY SCHEDULE TO PROJECT MANAGER & ENGINEER FOR REVIEW AND APPROVAL.

3. ALL WORK TO BE CONDUCTED DURING HOURS SPECIFIED BY THE PROJECT MANAGER.

4. ALL INSTALLATIONS SHALL BE IN ACCORDANCE WITH ALL APPLICABLE CODES AND BY-LAWS AND BE INSTALLED BY LICENSED WORKMEN SKILLED IN THAT PARTICULAR PORTION OF THE CONTRACT.

5. ANY CONFLICT OR QUESTIONS THAT ARISE IN RELATION TO THE DESIGN DOCUMENTS DURING THE TENDER PERIOD SHALL BE BROUGHT TO THE ATTENTION OF THE ENGINEER. IF THIS PROCEDURE IS NOT FOLLOWED, REROUTING AND MODIFICATION AS REQUIRED TO COMPLETE THE WORK SHALL BE THE RESPONSIBILITY OF THE CONTRACTOR.

6. GIVE ALL NOTICES, OBTAIN ALL NECESSARY PERMITS AND PAY ALL APPLICABLE FEES AND INSPECTION COSTS AND DELIVER TO ENGINEER ALL NECESSARY FINAL CERTIFICATES OF INSPECTION AND APPROVAL WHICH MAY BE REQUIRED BY AUTHORITIES HAVING JURISDICTION OVER WORK, AS EVIDENCE THAT WORK INSTALLED CONFORMS WITH LAWS AND REGULATIONS OF ALL GOVERNING AUTHORITIES, BEFORE FINAL CERTIFICATE OF PAYMENT MAY BE CONSIDERED DUE. FURNISH COPIES OF ALL DRAWINGS AS MAY BE REQUIRED TO COMPLY WITH ABOVE. NOTIFY INSPECTION AUTHORITIES IN SUFFICIENT TIME FOR THEM TO INSPECT WORK.

7. EXAMINE SITE AND LOCAL CONDITIONS AFFECTING WORK UNDER THIS DIVISION TO ENSURE THAT WORK UNDER THIS DIVISION CAN BE SATISFACTORILY CARRIED OUT WITHOUT CHANGES TO DRAWINGS. NO ALLOWANCE WILL BE MADE LATER FOR ANY EXPENSE INCURRED THROUGH FAILURE TO MAKE THIS EXAMINATION. START OF WORK WILL BE DEEMED EVIDENCE OF ACCEPTANCE OF, AND SATISFACTION WITH, EXISTING CONDITIONS.

8. GUARANTEE ALL WORK FOR 12 MONTHS FROM THE DATE OF ACCEPTANCE.

9. ENSURE THAT ALL PRECAUTIONS ARE TAKEN TO PROTECT ALL PERSONNEL FROM HAZARDS DURING THE WORK. PROTECT ALL EQUIPMENT FROM DAMAGE FROM ANY CAUSE INCLUDING WEATHER.

10. USE ONLY NEW, FULLY CSA AND ULC APPROVED FOR USE AS INSTALLED MATERIALS, AND TO MEET THIS SPECIFICATION IN ALL RESPECTS.

11. INSPECT ALL EQUIPMENT UPON DELIVERY AND NOTIFY PROJECT ENGINEER OF ANY DAMAGE OR DEFICIENCIES.

12. COORDINATE MATERIAL STORAGE WITH THE SITE SUPERINTENDENT AND OTHER TRADES.

13. CONTRACTOR TO NOTIFY PROJECT MANAGER IN WRITING MINIMUM OF THREE (3) WORKING DAYS BEFORE SCHEDULED SUBSTANTIAL COMPLETION TO ARRANGE INTERIM INSPECTION AND EQUIPMENT COMMISSIONING. NOTIFY PROJECT MANAGER IN WRITING OF ANY CHANGES IN SCHEDULE.

14. DURING THE COURSE OF CONSTRUCTION AND UPON COMPLETION, REMOVE ALL RUBBISH AND WASTE RESULTING FROM THIS WORK, TO THE SATISFACTION OF THE ENGINEER. CHECK, CLEAN AND REPAINT WHERE NECESSARY, ALL ELECTRICAL EQUIPMENT AND LEAVE IN A FIRST CLASS CONDITION.

15. THE WORK AS COVERED BY THESE SPECIFICATIONS AND PLANS IS INTENDED TO COMPLY EXACTLY WITH THE LATEST RULES AND REGULATIONS OF THE INSPECTION AUTHORITIES, AND THESE RULES ARE TO BE CONSIDERED AN INTEGRAL PART OF THESE SPECIFICATIONS. IN CASE OF CONFLICT, ANY RULING BY THE INSPECTION AUTHORITY SHALL BE FINAL. ALL CHANGES AND ALTERATIONS TO THE CONTRACTOR'S WORK REQUIRED BY AN AUTHORIZED INSPECTOR OR ANY AUTHORITY HAVING JURISDICTION DUE TO THE CONTRACTORS WORK SHALL BE CARRIED OUT AT NO EXPENSE TO THE OWNER.

16. MANUFACTURER'S INSTRUCTIONS REGARDING THE HANDLING, INSTALLATION AND TESTING OF EQUIPMENT SPECIFIED HEREIN SHALL BE CONSIDERED PART OF THIS SPECIFICATION.

17. PROVIDE ELECTRONIC COPY (PDF FORMAT) OF SHOP DRAWINGS FOR ALL SYSTEMS AND EQUIPMENT FOR REVIEW. SHOP DRAWINGS SHALL INCLUDE BUT NOT BE LIMITED TO, THE FOLLOWING INFORMATION:
a. FLOOR ANCHORING METHOD AND FOUNDATION TEMPLATE.
b. DIMENSIONED CABLE ENTRY AND EXIT LOCATIONS.
c. DIMENSIONED POSITION AND SIZE OF BUS.
d. OVERALL WEIGHT, LENGTH, HEIGHT AND DEPTH, GAUGE AND TYPE OF MATERIALS.
e. DIMENSIONED LAYOUT OF INTERNAL AND FRONT PANEL.
f. MOUNTED COMPONENTS.
g. ELECTRICAL CHARACTERISTICS AND PERFORMANCE DATA.
h. WIRING DIAGRAMS.
i. NAME OF CONTRACTOR C/W SIGNED REVIEW STAMP.
j. NAME OF COMPONENT, SERVICE OR SYSTEM.
k. NUMBER OF PAGES FOR EACH TYPED PAGE (IE. PG 1 OF 5).

18. SUBMIT ELECTRONIC (PDF FORMAT) COPY OF OPERATION & MAINTENANCE (O&M) MANUALS FOR APPROVAL. PROVIDE A COPY OF THE FOLLOWING IN THE MANUALS:
a. LETTER OF WARRANTY
b. ELECTRICAL SAFETY AUTHORITY (ESA) INSPECTION CERTIFICATE.
c. CITY INSPECTION REPORT
d. FIRE ALARM VERIFICATION REPORT
e. UPDATED PANEL SCHEDULES, C/W ELECTRICAL COMPANY'S NAME AND DATED
f. SHOP DRAWINGS
g. AS BUILTS
h. LOAD BALANCING REPORT.
i. MECHANICAL EQUIPMENT START UP REPORTS.
j. LIST OF SUPPLIERS C/W ADDRESS AND PHONE NUMBERS.
k. SEISMIC REVIEW LETTER.

19. SUPPLY ALL NECESSARY TOOLS, EQUIPMENT AND PERSONNEL AND PROVIDE DEMONSTRATION AND TRAINING TO OPERATING AND MAINTENANCE PERSONNEL IN OPERATING, CONTROLLING, ADJUSTING, TROUBLESHOOTING AND SERVICING OF ALL SYSTEMS AND EQUIPMENT DURING REGULAR WORK HOURS, PRIOR TO ACCEPTANCE.

20. AFTER AWARD OF CONTRACT, SUBMIT A DETAILED COST BREAKDOWN INDICATING MATERIAL AND LABOUR COSTS FOR EACH PORTION OF THE WORK, INCLUDING DEMOLITION, LIGHTING, POWER DISTRIBUTION, COMMUNICATIONS, FIRE ALARM, ETC. TO BE APPROVED BY THE ENGINEER.

21. EXISTING ELECTRICAL SYSTEMS HAVE BEEN ONLY PARTIALLY INDICATED. REGARD INFORMATION RELATED TO EXISTING INSTALLATION AS A GUIDE ONLY. DETERMINE STATUS, QUANTITIES AND LOCATION OF EQUIPMENT AND SYSTEMS, ON SITE, PRIOR TO COMMENCEMENT OF REMOVAL AND/OR EXTENSION OF SAME.

22. THE DRAWINGS SHALL BE CONSIDERED TO SHOW THE GENERAL CHARACTER AND SCOPE OF THE WORK AND NOT THE EXACT DETAILS OF THE INSTALLATION. THE INSTALLATION SHALL BE COMPLETE WITH ALL ACCESSORIES REQUIRED FOR A COMPLETE AND OPERATIVE INSTALLATION.

23. THESE ELECTRICAL DRAWINGS AND SPECIFICATIONS MUST BE READ IN CONJUNCTION WITH THE ARCHITECTURAL AND MECHANICAL DRAWINGS AND SPECIFICATIONS.

24. THE WORD "PROVIDE" SHALL DENOTE "SUPPLY, INSTALL, CONNECT AND TEST".

25. LABELING:
a. FOR ALL NEW, RELOCATED AND EXISTING-TO-REMAIN ELECTRICAL DEVICES WITHIN THE CONTRACT AREA, PROVIDE CLEAR "BROTHER P-TOUCH" LABELS INDICATING CIRCUIT AND PANEL AT ALL EQUIPMENT, DEVICES, RECEPTACLES AND JUNCTION BOXES. FOR DEDICATED RECEPTACLE, INCLUDE THE WORD "DED" C/W CIRCUIT NUMBER. FOR EXIT LIGHTS, PROVIDE [BLACK] LETTERING ON [RED] BACKGROUND.
b. PROVIDE LAMACOID LABELS ON DISCONNECT SWITCHES, MOTOR STARTERS, TRANSFORMERS AND PANELS. CLEARLY INDICATE EQUIPMENT CONTROLLED OR AREA SERVICED AS WELL AS FEEDER SOURCE. INDICATE FUSE SIZE AND TYPE ON FUSED DISCONNECTS SWITCHES. LETTERING TO BE BLACK ON WHITE BACKGROUND, MINIMUM 25mm HIGH.
c. TRACE EXISTING CIRCUITS AND UPDATE PANEL SCHEDULES.

26. GENERAL TRADES TO PROVIDE CUTTING, PATCHING AND CORING OF ALL WALLS, CEILINGS AND OTHER SURFACES REQUIRED TO FIT THE ELECTRICAL EQUIPMENT. CHECK WITH BUILDING MANAGEMENT PRIOR TO CORE DRILLING AND CUTTING OF FLOOR SLAB, REGARDING BUILDING REQUIREMENTS AND POLICIES. PRIOR TO SLAB CUTTING OR CORING, FIRST SCAN THE SLAB AND COORDINATE DRILLING TO MINIMIZE CUTTING OF THE REINFORCING STEEL. FIRE STOP ALL NEW FIRE RATED PENETRATIONS. THE CONTRACTOR IS TO INCLUDE IN TENDER PRICE ALL WORK ASSOCIATED WITH CORE DRILLING AFTER NORMAL WORKING HOURS. OBTAIN WRITTEN VERIFICATION OF THE LOCATIONS FROM THE ARCHITECT AND/OR INTERIOR DESIGNER PRIOR TO DRILLING. CUTTING TORCHES SHALL NOT BE USED FOR MAKING HOLES. PATCH ALL HOLES THROUGH SLAB WITH FIRE-STOP CAULKING (ULC LISTED). PATCHED SURFACES ARE TO BE PRIME FINISHED, READY FOR FINAL COVERING BY OTHERS.

27. SEISMIC RESTRAINT SYSTEM (SRS):

a. GENERAL:
a.a. PROVIDE DESIGN, SUPPLY AND INSTALLATION OF COMPLETE SRS FOR ALL SYSTEMS, EQUIPMENT SPECIFIED FOR INSTALLATION ON THIS PROJECT AS PER ONTARIO BUILDING, CSA S832-06(R.2011).
a.b. DESIGN TO BE BY PROFESSIONAL ENGINEER SPECIALIZING IN DESIGN OF SRS AND REGISTERED IN PROVINCE OF ONTARIO. INCLUDE ALL COSTS ASSOCIATED WITH THIS WORK AS IT RELATES TO ELECTRICAL DIVISION.
a.c. INSTALLATIONS. SUBMIT DESIGN SKETCHES C/W PROFESSIONAL STAMP PRIOR TO START OF INSTALLATIONS, C/W INSTALLATION REQUIREMENTS.
a.d. ACCEPTABLE MATERIALS: KORFUND-SAMPSON, MASON INDUSTRIES, TELCOUSTICS, VIBRA-SONIC CONTROL, VIBRON.
a.e. SUBMITTALS TO INCLUDE FULL DETAILS OF DESIGN CRITERIA.
a.f. SUBMIT ADDITIONAL COPY OF SHOP DRAWINGS AND PRODUCT DATA TO STRUCTURAL ENGINEER FOR REVIEW OF CONNECTION POINTS TO BUILDING STRUCTURE.
a.g. INSTALL VIBRATION ISOLATION EQUIPMENT IN ACCORDANCE WITH MANUFACTURER'S INSTRUCTIONS AND ADJUST MOUNTINGS TO LEVEL EQUIPMENT. ENSURE PIPE, DUCT AND ELECTRICAL CONNECTIONS TO ISOLATED EQUIPMENT DO NOT REDUCE SYSTEM FLEXIBILITY. ENSURE THAT PIPE, CONDUIT AND DUCT PASSING THROUGH WALLS AND FLOORS DO NOT TRANSMIT VIBRATIONS.

28. ANCHORING METHODS:
a. ELECTRICAL EQUIPMENT, FIXTURES, CABLE TRAY, CONDUIT AND CABLING IS TO BE SECURELY ANCHORED OR FASTENED TO THE BUILDING STRUCTURE USING DRILLED HOLE WEDGE ANCHORS FOR CONCRETE STRUCTURES OR STEEL CLAMPS FOR STEEL STRUCTURES.
a.a. AIR, FUEL OR POWDER ACTUATED DEVICES OR ANY OTHER EQUIVALENT TYPE OF FASTENING DEVICES ARE NOT TO BE USED.
a.b. WHERE ANCHORING METHOD FORMS PART OF SEISMIC RESTRAINT REQUIREMENTS, ANCHORING METHODS TO COMPLY WITH SEISMIC RESTRAINT SYSTEMS (SRS).

b. LUMINAIRE SUPPORTS:
b.a. FOR RECESSED OR SURFACE MOUNTED LIGHTING IN SUSPENDED CEILING INSTALLATIONS, SUPPORT LUMINAIRES INDEPENDENTLY FROM CEILING, BY MEANS OF A MINIMUM OF TWO CHAIN HANGERS BOLTED TO DIAGONAL CORNERS OF THE FIXTURE BODY AND SECURED TO BUILDING STRUCTURE IN ACCORDANCE WITH ESA, AND SEISMIC RESTRAINT SYSTEMS (SRS).

29. GROUNDING AND BONDING:
a. PROVIDE GROUNDING AND BONDING OF ALL EQUIPMENT WITH APPROVED FITTINGS AND CONDUCTORS OF AMPLE CAPACITY IN ACCORDANCE WITH ONTARIO ELECTRICAL SAFETY CODE. ALL CONDUCTORS SHALL HAVE GREEN INSULATION OR BE COLOUR CODED WITH PERMANENTLY ATTACHED GREEN TAPE 21MMWIDE AT EACH END. PROVIDE INSULATED GROUND/BONDING CONDUCTOR IN EACH CONDUIT.

b. PROVIDE A PRE-DRILLED 300 MM X 150 MM X 6 MM COPPER GROUND BAR IN THE SERVER ROOM CONNECTED TO SERVICE ENTRANCE GROUND IN ELECTRICAL ROOM.

30. WIRING AND RACEWAYS:
a. ALL INTERIOR WIRING SHALL BE COPPER RW90 (T90 FOR 347V OR LESS) #12 CONDUCTOR MINIMUM.
b. ALL HAZARDOUS INSTALLATIONS TO BE IN TECK WITH APPROVED CONNECTORS
c. AC-90 (BX) MAY BE USED IN REMOVABLE CEILINGS AND METAL PARTITION WALLS, MAXIMUM LENGTH 3 METERS.
d. ALL NEW RACEWAYS SHALL BE THIN WALL ELECTRICAL METALLIC TUBING (EMT) UNLESS OTHERWISE INDICATED. CONDUITS TO BE COMPLETE WITH STEEL SET-SCREW COUPLINGS AND CONNECTORS AND NYLON BUSHING.
e. USE LIQUID TIGHT FLEXIBLE METAL CONDUIT FOR CONNECTION TO MOTORS.
f. USE LIQUID TIGHT FLEXIBLE METAL CONDUIT FOR CONNECTION TO EQUIPMENT IN DAMP, WET OR CORROSIVE LOCATIONS.
g. SURFACE CONDUIT TO RUN PARALLEL OR PERPENDICULAR TO BUILDING LINES.
h. ALL CONDUITS AND JUNCTION BOXES TO BE ANCHORED TO THE BUILDING STRUCTURE.
i. PROVIDE A POLYPROPYLENE PULL STRING IN ALL EMPTY CONDUITS.
j. EXISTING FEEDERS RELOCATED UNDER THIS CONTRACT TO BE REWIRED: SPLICE NEW WIRE TO EXISTING WIRE FROM JUNCTION BOX TO JUNCTION BOX, OR FROM JUNCTION BOX TO EXISTING EQUIPMENT.
k. CONTRACTOR MAY RE-USE EXISTING CONDUIT AND/OR GRID PULL BOXES WHERE SUITABLE FOR RE-USE WITH NEW OR RELOCATED RUNS.
l. REMOVE AND DISPOSE OF ANY REDUNDANT EXISTING WIRING .
m. 120V CIRCUITS OF LENGTH GREATER THAN 25m TO BE #1O AWG MINIMUM OR AS REQUIRED TO LIMIT VOLTAGE DROP WITHIN CODE SPECIFIED VALUE.
n. MINIMUM SIZE CONDUIT TO BE 21mm UNLESS SPECIFIED OTHERWISE.

31. DEVICES: SWITCHES AND RECEPTACLES TO BE SPECIFICATION GRADE WITH STAINLESS STEEL COVER PLATES TO CONFORM WITH INTERIOR DESIGNER'S DRAWINGS. AUTOMATED SWITCHED TO BE EQUAL TO WATTSTOPER. INSTALL & MOUNT TO CODES AND STANDARDS. COORDINATE EXACT LOCATIONS WITH ARCHITECTURAL AND/OR INTERIOR DESIGNER'S DRAWINGS.

32. MOUNTING HEIGHTS:

UNLESS NOTED OTHERWISE, MOUNTING HEIGHT FOR ALL ELECTRICAL DEVICES SHALL MEET 'BARRIER-FREE' CODE REQUIREMENTS:

a. 400mm A.F.F. FOR RECEPTACLES, VOICE/DATA OUTLETS, ETC.
b. 1100mm A.F.F. FOR LIGHT SWITCHES, ETC.
c. 175mm ABOVE TOP OF COUNTERS OR COUNTER BACK SPLASHES.
d. 1100mm A.F.F. FOR PULL STATIONS, THERMOSTATS
e. WALL MOUNTED FIRE ALARM AUDIBLE AND VISUAL SIGNAL DEVICES: MINIMUM 2300MM AND MAXIMUM 2400MM TO TOP OF DEVICE, OR 150MM BELOW CEILING WHERE CEILING HEIGHTS DO NOT ALLOW. ALL IN ACCORDANCE WITH CAN/ULC S-524.

33. LUMINAIRES:
a. PROVIDE LIGHTING FIXTURES, COMPLETE WITH LAMPS, AS INDICATED IN LIGHT FIXTURE SCHEDULE.

34. FIXTURE INSTALLATION: DO NOT MOUNT FIXTURES ABOVE PIPES, DUCTS OR EQUIPMENT. CHECK LAYOUTS OF WORK BY OTHER TRADES ON PROJECTS AND PLAN COOPERATIVELY WITH OTHERS TO AVOID CONFLICT. PROVIDE LONGER HANGERS TO CLEAR OBSTRUCTIONS, IN EVENT OF UNAVOIDABLY TIGHT LOCATIONS. PROVIDE CHAIN HANGERS FOR ALL FIXTURES IN T-BAR CEILINGS.

35. EXIT LIGHTS:
a. EXIT:
a.a. TO CSA C22.2 NO.141-02AND CSA C860.
a.b. HOUSING: EXTRUDED STEEL, WHITE FINISH.
a.c. FACE AND BACK PLATES: EXTRUDED ALUMINUM.
a.d. LAMPS: LED WITH 25-YEAR RATED LIFE.
b. PICTOGRAM: PICTOGRAM PANEL WITH MULTIPLE FILMS FOR DIRECTION SELECTION, AND CLEAR PROTECTIVE PANEL. PICTOGRAM PANEL SHALL CONSIST OF GREEN PICTOGRAM AND WHITE GRAPHIC SYMBOL MEETING THE VISIBILITY SPECIFICATIONS REFERRED TO IN ISO 3864-1, AND CONFORM TO THE DIMENSIONS INDICATED IN ISO 7010.
c. SUITABLE FOR 347V OR 120V NORMAL SUPPLY AND 12VDC EMERGENCY SUPPLY.
d. DIE CAST MOUNTING BRACKET FOR WALL, CEILING, OR END MOUNTING AS INDICATED.
e. PROVIDE CIRCUIT LABELS AT ALL EXIT SIGNS.

36. UNIT EQUIPMENT FOR EMERGENCY LIGHTING:
a. PROVIDE EMERGENCY LIGHTING AS SHOWN ON DRAWINGS AND AS SPECIFIED HEREIN. USE 12V DC UNITS CONSISTING OF A SEALED LEAD BATTERY UNIT, WITH HI-LO SOLID STATE CHARGER, CONTROLS, TEST SWITCH, A.C. AND HI-CHARGE PILOT LIGHTS, VOLTMETER, AMMETER, LONG LIFE, SEALED, LEAD BATTERY IN 18-GAUGE STEEL CASE COMPLETE WITH MOUNTING BRACKET. UNIT TO BE PROVIDED WITH 3-CONDUCTOR POWER CORD TO PLUG INTO WALL MOUNTED RECEPTACLE.
b. EMERGENCY LIGHTS ARE NORMALLY OFF, AND BATTERY TO BE KEPT FULLY CHARGED BY AUTOMATIC CHARGER. ON FAILURE OF NORMAL POWER, EMERGENCY LIGHTS MUST COME ON AUTOMATICALLY.
c. PROVIDE BATTERY UNITS WITH SUFFICIENT CAPACITY TO PROVIDE 90% VOLTAGE AFTER 30 MINUTES OPERATION WITH CONNECTED LOAD PLUS 50W SPARE CAPACITY. BATTERY TO CARRY A 10 YEAR PRO-RATA WARRANTY IN ADDITION TO THE 12 MONTH GUARANTEE ON TOTAL UNIT.
d. REMOTE LIGHTING HEADS TO BE 9W LED, 12V. RUN WIRING IN CONDUIT MINIMUM #10 AWG OR AS RECOMMENDED BY MANUFACTURER, VOLTAGE DROP AT ANY REMOTE HEAD SHALL NOT EXCEED 5%.

38. DISCONNECT SWITCHES:
ak. HEAVY DUTY FUSIBLE AND NON-FUSIBLE DISCONNECT SWITCH IN CSA ENCLOSURE 2 (SPRINKLER PROOF), SIZED AS INDICATED. CSA 3 ENCLOSURE IN OUTDOOR OR DAMP LOCATIONS. ARC QUENCHER AND VISIBLE BLADE, QUICK MAKE, QUICK BREAK TYPE.
al. PROVISION FOR PADLOCKING IN [ON-]OFF SWITCH POSITION.
am. MECHANICALLY INTERLOCKED DOOR TO PREVENT OPENING WHEN HANDLE IN ON POSITION.
an. FUSES: SIZE AS INDICATED, HRCJ (TIME DELAY TYPE).

39. MECHANICAL EQUIPMENT WIRING: PROVIDE ALL WIRING TO MECHANICAL EQUIPMENT. OBTAIN MECHANICAL SHOP DRAWINGS AND RECONFIRM FEEDER AND BREAKER REQUIREMENTS PRIOR TO INSTALLATION.

40. PANELBOARDS:
a. INSTALL CIRCUIT BREAKERS IN PANELBOARDS BEFORE SHIPMENT.
b. IN ADDITION TO CSA REQUIREMENTS MANUFACTURER'S NAMEPLATE MUST SHOW FAULT CURRENT THAT PANEL INCLUDING BREAKERS HAS BEEN BUILT TO WITHSTAND.
c. 250V BUSSES AND BREAKERS RATED FOR 10kA AND 14kA (SYMMETRICAL) INTERRUPTING CAPACITY MINIMUM RESPECTIVELY, OR AS INDICATED OTHERWISE.
d. SEQUENCE PHASE BUSSING WITH ODD NUMBERED BREAKERS ON LEFT AND EVEN ON RIGHT, WITH EACH BREAKER IDENTIFIED BY PERMANENT NUMBER IDENTIFICATION AS TO CIRCUIT NUMBER AND PHASE.
e. MAINS, NUMBER OF CIRCUITS, AND NUMBER AND SIZE OF BRANCH CIRCUIT BREAKERS AS INDICATED.
f. TWO KEYS FOR EACH PANELBOARD AND KEY PANELBOARDS ALIKE.
g. MAINS SUITABLE FOR BOLT-ON BREAKERS.
h. TRIM WITH CONCEALED FRONT BOLTS AND HINGES. 14 GAUGE UP TO 24 CIRCUIT,12 GAUGE FOR LARGER PANELS.
i. DISTRIBUTION PANELS SHALL BE MINIMUM 12 GAUGE CONSTRUCTION.
j. COPPER BUSSING AND GROUND.

41. MOLDED CASE CIRCUIT BREAKERS:
a. BOLT-ON MOLDED CASE CIRCUIT BREAKER: QUICK-MAKE, QUICK-BREAK TYPE, FOR MANUAL AND AUTOMATIC OPERATION WITH TEMPERATURE COMPENSATION FOR 40 C AMBIENT.
b. COMMON-TRIP BREAKERS: WITH SINGLE HANDLE FOR MULTI-POLE APPLICATIONS.
c. CIRCUIT BREAKERS WITH INTERCHANGEABLE TRIPS AS INDICATED.
d. MOLDED CASE CIRCUIT BREAKER TO OPERATE AUTOMATICALLY BY MEANS OF THERMAL AND MAGNETIC TRIPPING DEVICES TO PROVIDE INVERSE TIME CURRENT TRIPPING AND INSTANTANEOUS TRIPPING FOR SHORT CIRCUIT PROTECTION.

42. DRY TYPE TRANSFORMERS:
a. COPPER WINDINGS
b. TYPE: ANN., TO CSA C9 - DRY TYPE TRANSFORMER
c. VOLTAGE TAPS: 4 - 2 1/2 % TAPS, 2 FCAN, 2 FCBN.
d. INSULATION: CLASS H, 150 C TEMPERATURE RISE. BASIC IMPULSE LEVEL (BIL): STANDARD.
e. HIPOT: STANDARD.
f. INTERNAL VIBRATION ISOLATION.
g. AVERAGE SOUND LEVEL: LESS THAN 45 DB
h. IMPEDANCE AT 170 C: LESS THAN 6.5 %
i. ENCLOSURE: EEMAC 1, REMOVABLE METAL FRONT PANEL OR SPRINKLERPROOF EEMAC 2 WHERE REQUIRED BY AUTHORITIES.
j. FLOOR MOUNTED FOR 75 KVA AND ABOVE, FLOOR OR WALL MOUNTED UP TO 45 KVA.
k. PRIMARY DELTA 3 WIRE, SECONDARY WYE GROUND 4 WIRE.
l. VOLTAGE AND KVA AS INDICATED ON DRAWINGS.

43. FIRE ALARM:

a. FIRE ALARM SYSTEM TO BE ADDRESSABLE, SINGLE STAGE, FIRE ALARM SYSTEM COMPONENTS TO BE CANULC ALL DEVICES TO BE LABELED WITH CORRECT IDENTIFICATION, INCLUDING THE LOOP AND THE DEVICE NUMBER, ON THE BASE OF THE DEVICE IN ACCORDANCE WITH BUILDING STANDARD. LABELING OF THE DEVICE MUST BE VISIBLE ON THE OUTSIDE FOR EASY IDENTIFICATION BY MAINTENANCE PERSONNEL.
b. ALL NEW DEVICES TO BE VERIFIED BY MANUFACTURER & FIRE ALARM AGENCY RESPONSIBLE FOR MAINTENANCE OF THE SYSTEM.
c. THE SOFTWARE AND THE FIRE ALARM ADDRESSABLE DEVICE LEGEND MUST BE UPDATED IMMEDIATELY TO ADD NEW DEVICES AND TO REMOVE ANY DEVICES THAT HAVE BEEN ELIMINATED AS A RESULT OF THE PROJECT. AT THE COMPLETION OF THE PROJECT AN UPDATED FIRE ALARM ADDRESSABLE DEVICE LEGEND FOR THE BUILDING MUST BE SUBMITTED TO THE PROJECT MANAGER.
d. THE SEQUENCE OF OPERATIONS OF FIRE SAFETY SYSTEMS MUST BE PROVIDED TO THE PROJECT MANAGER (ie. DOOR HOLDERS, EPO SHUTDOWNS, FAN SHUTDOWNS, DAMPER OPERATION, AC SHUTDOWNS ETC.)
e. NOTIFY AND DEMONSTRATE THE COMPLETE SYSTEM TO OWNER'S AND BUILDING INSPECTION'S REPRESENTATIVES. ONLY AFTER TESTING AND VERIFICATION PERFORMANCES HAVE BEEN COMPLETED AND ALL DEFICIENCIES RECTIFIED. IN THEIR PRESENCE, DEMONSTRATE THE PROPER FUNCTIONING OF THE SYSTEM. HAVE SYSTEM MANUFACTURER'S CERTIFIED TECHNICIAN PRESENT.

44. FIELD QUALITY CONTROL

aq. CONDUCT AND PAY FOR THE FOLLOWING TESTS:
aq.a. 600V AND 120V POWER DISTRIBUTION INCLUDING PHASING, VOLTAGE, GROUNDING AND LOAD BALANCING.
aq.b. LIGHTING AND CONTROLS
aq.c. MOTORS, HEATERS AND ASSOCIATED CONTROL EQUIPMENT
aq.d. INSULATION INTEGRITY TESTING
aq.e. HOT SPOT TESTING BY INFRARED SCANNER
aq.f. SYSTEMS: FIRE ALARM, COMMUNICATION.
b. SUBMIT TEST PROCEDURES AND INFORM ENGINEER AT LEAST 7 DAYS BEFORE SCHEDULED TESTS. ENGINEER TO WITNESS TESTS AT HIS DISCRETION.

45. COMMUNICATION
a HORIZONTAL CABLE DISTRIBUTION TO BE SUPPLIED BY OWNER WILL BE DONE WITH CABLES THROUGH CEILING SPACE.
b THIS ELECTRICAL CONTRACTOR TO PROVIDE HARD WALL OUTLETS WITH A DOUBLE GANG ELECTRICAL BOX WITH PLASTER RING AT EACH TELECOMMUNICATIONS OUTLET LOCATION SPECIFIED ON THE FLOOR PLANS. PROVIDE A 21mm CONDUIT WITH PULL STRING FROM EACH OF THESE ELECTRICAL BOXES UP INTO THE CEILING SPACE.

46. SECURITY
a CABLE DISTRIBUTION AND DEVICES TO BE SUPPLIED BY OWNER WILL BE DONE WITH CABLES THROUGH CEILING SPACE.
b THIS ELECTRICAL CONTRACTOR TO PROVIDE ALL INFRASTRUCTURE SPECIFIED ON THE FLOOR PLANS. PROVIDE EMT CONDUIT WITH PULL STRING AS INDICATED.

PANEL BOARD
SCHEDULE# B
VOLTS: 208V,3ø,4W,AMPS: 200
No. OF CIRCUITS: 42
TYPE: BREAKER ☒,FUSE☐
SURFACE ☒,FLUSH☐

OFFICE LIGHTING 2ND	01	02		
MEETING RM LIGHTING 2ND	15 03	04 15	OFFICE & MEETING ROOM RECEPTACLES	
OFFICE LIGHTING GROUND	15 05	06 15	DA OFFICE OFFICE RECEPTACLES	
CORRIDOR LIGHTING GROUND	15 07	08 20	2ND FL. CORRIDOR RECEPTACLES	
FIRE ALARM PANEL	15 09	10 15	2ND FL. FLEX WORKSHOP RECEPTACLES	
OPEN OFFICE LIGHTING GROUND	15 11	12 15	BOARD ROOM RECEPTACLES	
UTILITY RM FAN & LIGHTING 2ND	15 13	14 15	F.A OFFICE RECEPTACLES	
SPARE	15 15	16 15	V.L OFFICE RECEPTACLES	
DURESS SYSTEM	15 17	18 15	KITCHEN RECEPTACLES	
WASHROOM DOOR OPERATOR	15 19	20 15	FRIDGE RECEPTACLES	
MAIN DOOR OPERATOR	15 21	22 20	COUNTER RECEPTACLES	
MAIN DOOR OPERATOR	15 23	24 15	DISHWASHER	
ACCESSIBLE LIFT	15 25	26 20	COUNTER RECEPTACLES	
BOILER #1	20 27	28 15	GROUND FL. FLEX WORKSHOP RECEPTACLES	
BOILER #2	20 29	30 20	GROUND FL. CORRIDOR RECEPTACLES	
	31	32 15	CORY'S OFFICE RECEPTACLES	
CU-1A	33	34 15	COORDINATORS RECEPTACLES	
	20 35	36 15	MANAGER & MEETING ROOM RECEPTACLES	
	37	38 20	PRINTER	
CU-2A	39	40 15	OUTDOOR RECEPTACLES	
	20 41	42 15	COORDINATORS RECEPTACLES	
	43	44 15	WASHROOM RECEPTACLES	
P-1	15 45	46 15	EXTERIOR LIGHTING	
	47	48 15	HRV-2	
AC-1A	15 49	50 15	HRV-1	
	51	52 15	SECURITY	
AC-1B	15 53	54 15	SECURITY	
	55	56 15	IT RACK	
AC-2A	15 57	58 15		
	59	60 15	P-2	
AC-2B	61	62	HWT-1	
	15 63	64 25		
	65	66	GATE#1	
CU-1B	67	68 20	GATE #2	
	30 69	70 20	SPARE	
	71	72 15	SPARE	
CU-2B	73	74 15	SPARE	
	30 75	76 15	SPARE	
	77	78 15	SPARE	

Antares Engineering Group Inc.
Professional Mechanical, Electrical, Testing and Research Engineers
38 Sachs Forest Place, Ottawa, Ontario, K2E 7J4
Phone (613) 723-6034; e-mail: mail@antaresengineering.ca

NO.	DESCRIPTION	
3.	ISSUED FOR TENDER	15/01/2021
2.	TENDER FOR PRE-ENG. BUILDING STRUCTURE - ONLY	14/12/2020
1.	ISSUED FOR CLIENT REVIEW	15/11/2020

REVISIONS

CONTRACTOR SHALL CHECK AND VERIFY ALL DIMENSIONS AND REPORT ANY OMISSIONS OR DISCREPANCIES TO THE ENGINEER BEFORE PROCEEDING WITH THE WORK
DO NOT SCALE DRAWINGS

THIS DRAWING SHALL NOT BE USED FOR CONSTRUCTION PURPOSES UNTIL SIGNED BY THE ENGINEER

DATE JYLY 2020
DRAWN S.S.
DATE JULY 2020
CHECKED J.C.J.
ISSUED 15 JULY 2020

CONSULTANT

CONSULTANT

S.J. LAWRENCE ARCHITECTURAL I n c.
18 DEAKING STREET SUITE 205 NEPEAN, ,ONTARIO K2E 8B7
TEL (613) 739 7770 e-mail; brandon@sjarchitect.com

PROJECT
CITYSCAPE COMMERCIAL WAREHOUSE
144 BENTLEY AVENUE OTTAWA,ONTARIO

DRAWING
ELECTRICAL
SPECIFICATIONS AND SCHEDULES

SCALE AS SHOWN
PROJ. NO. AEG 20-727
SHEET E-5
REV.