ADDENDUM 01 Guardrail Sketch

January 15, 2020
Addendum 01
The Fitness Lab Addition

1. Please find enclosed ASK-02 for additional information on the stair details.

50 Camelot Drive, Nepean, On K2G 5X8 Tel: 613-224-1255 Fax: 613-224-1255

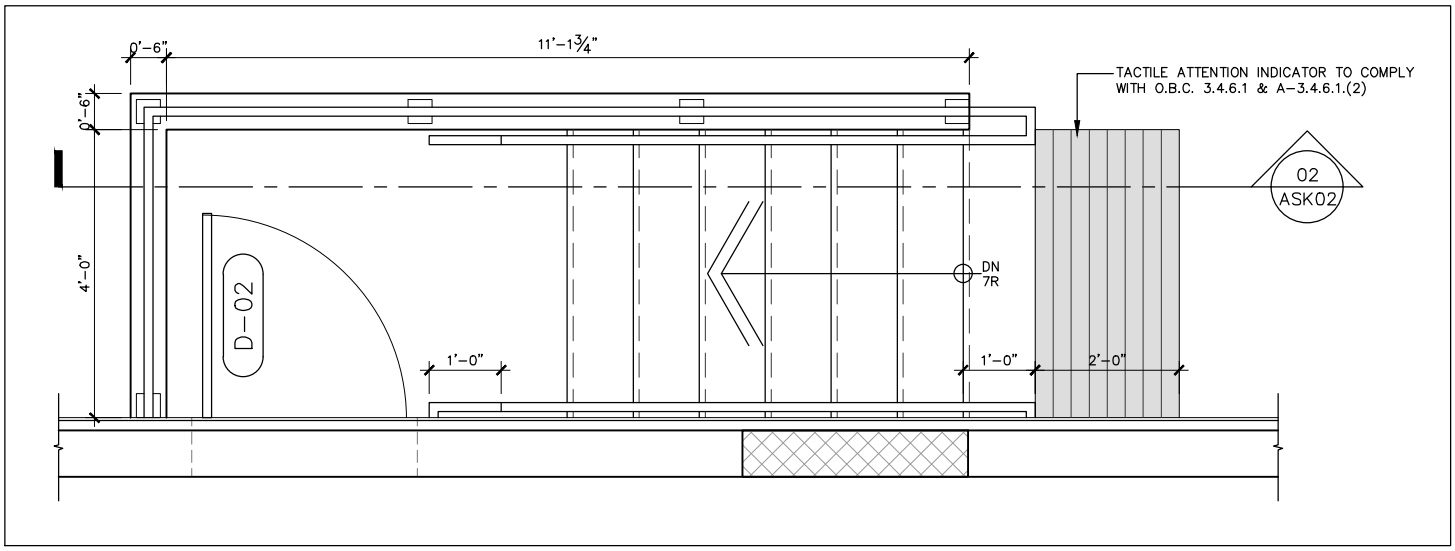

01 ASK02 STAIR PLAN
SCALE: 3/8"=1'-0"

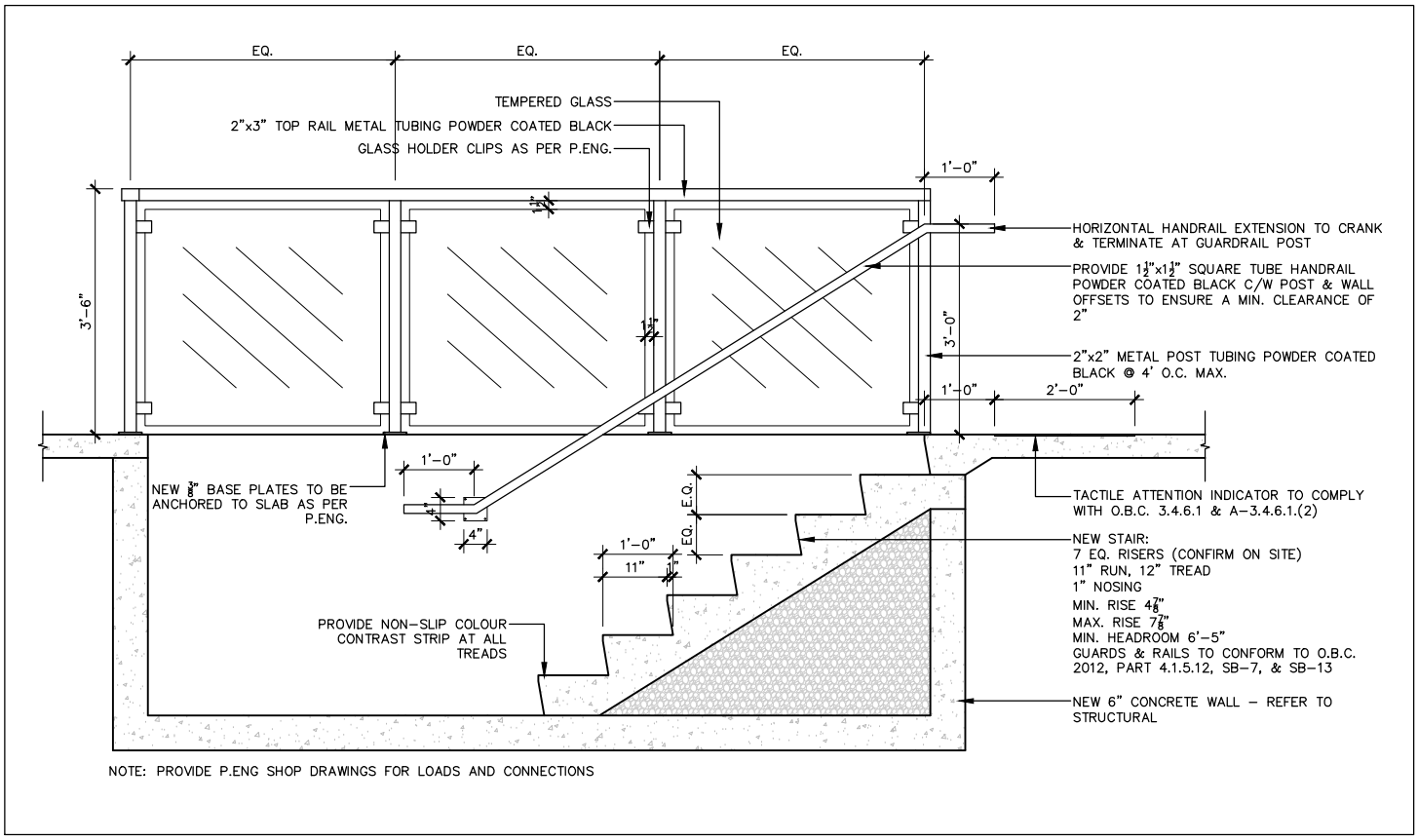

NOTE: PROVIDE P.ENG SHOP DRAWINGS FOR LOADS AND CONNECTIONS

02 ASK02 STAIR SECTION
SCALE: 3/8"=1'-0"

DRAWING TITLE: STAIR & GUARDRAIL CLARIFICATION			SEAL:
PROJECT INFORMATION: THE FITNESS LAB, 5536 ANN ST, MANOTICK, ON	DRAWN BY: B.L.	DATE: 2020.01.14	
	SCALE: AS SHOWN	PROJECT NUMBER: SL-981-19	SHEET NUMBER: ASK-02

SJL LAWRENCE ARCHITECT INCORPORATED