VILLAGE CENTRE PLACE

NEW RETAIL BUILDING - 6075 BANK STREET, GREELY, ON

ELECTRICAL

ELECTRICAL SPECIFICATIONS:

1. COMPLY WITH THE REQUIREMENTS OF THE INSTRUCTIONS TO BIDDERS, THE GENERAL CONDITIONS OF THE CONTRACT AND THE SUPPLEMENTARY GENERAL CONDITIONS INCLUDED IN THE TENDER DOCUMENTS.

2. CONTRACTOR SHALL FOLLOW THE BIDDING DOCUMENT PROJECT SCHEDULE. UPON AWARD, CONTRACTOR SHALL SUBMIT WORK SCHEDULE AND EQUIPMENT DELIVERY SCHEDULE TO PROJECT MANAGER & ENGINEER FOR REVIEW AND APPROVAL.

3. ALL WORK TO BE CONDUCTED DURING HOURS SPECIFIED BY THE PROJECT MANAGER.

4. ALL INSTALLATIONS SHALL BE IN ACCORDANCE WITH ALL APPLICABLE CODES AND BY-LAWS AND BE INSTALLED BY LICENSED WORKMEN SKILLED IN THAT PARTICULAR PORTION OF THE CONTRACT.

5. ANY CONFLICT OR QUESTIONS THAT ARISE IN RELATION TO THE DESIGN DOCUMENTS DURING THE TENDER PERIOD SHALL BE BROUGHT TO THE ATTENTION OF THE ENGINEER. IF THIS PROCEDURE IS NOT FOLLOWED, REROUTING AND MODIFICATION AS REQUIRED TO COMPLETE THE WORK SHALL BE THE RESPONSIBILITY OF THE CONTRACTOR.

6. GIVE ALL NOTICES, OBTAIN ALL NECESSARY PERMITS AND PAY ALL APPLICABLE FEES AND INSPECTION COSTS AND DELIVER TO ENGINEER ALL NECESSARY FINAL CERTIFICATES OF INSPECTION AND APPROVAL WHICH MAY BE REQUIRED BY AUTHORITIES HAVING JURISDICTION OVER WORK, AS EVIDENCE THAT WORK INSTALLED CONFORMS WITH LAWS AND REGULATIONS OF ALL GOVERNING AUTHORITIES, BEFORE FINAL CERTIFICATE OF PAYMENT MAY BE CONSIDERED DUE. FURNISH COPIES OF ALL DRAWINGS AS MAY BE REQUIRED TO COMPLY WITH ABOVE. NOTIFY INSPECTION AUTHORITIES IN SUFFICIENT TIME FOR THEM TO INSPECT WORK.

7. EXAMINE SITE AND LOCAL CONDITIONS AFFECTING WORK UNDER THIS DIVISION TO ENSURE THAT WORK UNDER THIS DIVISION CAN BE SATISFACTORILY CARRIED OUT WITHOUT CHANGES TO DRAWINGS. NO ALLOWANCE WILL BE MADE LATER FOR ANY EXPENSE INCURRED THROUGH FAILURE TO MAKE THIS EXAMINATION. START OF WORK WILL BE DEEMED EVIDENCE OF ACCEPTANCE OF, AND SATISFACTION WITH, EXISTING CONDITIONS.

8. GUARANTEE ALL WORK FOR 12 MONTHS FROM THE DATE OF ACCEPTANCE.

9. ENSURE THAT ALL PRECAUTIONS ARE TAKEN TO PROTECT ALL PERSONNEL FROM HAZARDS DURING THE WORK. PROTECT ALL EQUIPMENT FROM DAMAGE FROM ANY CAUSE INCLUDING WEATHER.

10. USE ONLY NEW, FULLY CSA AND ULC APPROVED FOR USE AS INSTALLED MATERIALS, AND TO MEET THIS SPECIFICATION IN ALL RESPECTS.

11. INSPECT ALL EQUIPMENT UPON DELIVERY AND NOTIFY PROJECT ENGINEER OF ANY DAMAGE OR DEFICIENCIES.

12. COORDINATE MATERIAL STORAGE WITH THE SITE SUPERINTENDENT AND OTHER TRADES.

13. CONTRACTOR TO NOTIFY PROJECT MANAGER IN WRITING MINIMUM OF THREE (3) WORKING DAYS BEFORE SCHEDULED SUBSTANTIAL COMPLETION TO ARRANGE INTERIM INSPECTION AND EQUIPMENT COMMISSIONING. NOTIFY PROJECT MANAGER IN WRITING OF ANY CHANGES IN SCHEDULE.

14. DURING THE COURSE OF CONSTRUCTION AND UPON COMPLETION, REMOVE ALL RUBBISH AND WASTE RESULTING FROM THIS WORK, TO THE SATISFACTION OF THE ENGINEER. CHECK, CLEAN AND REPAINT WHERE NECESSARY, ALL ELECTRICAL EQUIPMENT AND LEAVE IN A FIRST CLASS CONDITION.

15. THE WORK AS COVERED BY THESE SPECIFICATIONS AND PLANS IS INTENDED TO COMPLY EXACTLY WITH THE LATEST RULES AND REGULATIONS OF THE INSPECTION AUTHORITIES, AND THESE RULES ARE TO BE CONSIDERED AN INTEGRAL PART OF THESE SPECIFICATIONS. IN CASE OF CONFLICT, ANY RULING BY THE INSPECTION AUTHORITY SHALL BE FINAL. ALL CHANGES AND ALTERATIONS TO THE CONTRACTOR'S WORK REQUIRED BY AN AUTHORIZED INSPECTOR OR ANY AUTHORITY HAVING JURISDICTION DUE TO THE CONTRACTORS WORK SHALL BE CARRIED OUT AT NO EXPENSE TO THE OWNER.

16. MANUFACTURER'S INSTRUCTIONS REGARDING THE HANDLING, INSTALLATION AND TESTING OF EQUIPMENT SPECIFIED HEREIN SHALL BE CONSIDERED PART OF THIS SPECIFICATION.

17. PROVIDE ELECTRONIC COPY (PDF FORMAT) OF SHOP DRAWINGS FOR ALL SYSTEMS AND EQUIPMENT FOR REVIEW. SHOP DRAWINGS SHALL INCLUDE BUT NOT BE LIMITED TO, THE FOLLOWING INFORMATION:
   a. FLOOR ANCHORING METHOD AND FOUNDATION TEMPLATE.
   b. DIMENSIONED CABLE ENTRY AND EXIT LOCATIONS.
   c. DIMENSIONED POSITION AND SIZE OF BUS.
   d. OVERALL WEIGHT, LENGTH, HEIGHT AND DEPTH, GAUGE AND TYPE OF MATERIALS.
   e. DIMENSIONED LAYOUT OF INTERNAL AND FRONT PANEL.
   f. MOUNTED COMPONENTS.
   g. ELECTRICAL CHARACTERISTICS AND PERFORMANCE DATA.
   h. WIRING DIAGRAMS.
   i. NAME OF CONTRACTOR C/W SIGNED REVIEW STAMP.
   j. NAME OF COMPONENT, SERVICE OR SYSTEM.
   k. NUMBER OF PAGES FOR EACH TYPED PAGE (IE. PG 1 OF 5).

18. SUBMIT ELECTRONIC (PDF FORMAT) COPY OF OPERATION & MAINTENANCE (O&M) MANUALS FOR APPROVAL. PROVIDE A COPY OF THE FOLLOWING IN THE MANUALS:
   a. LETTER OF WARRANTY
   b. ELECTRICAL SAFETY AUTHORITY (ESA) INSPECTION CERTIFICATE.
   c. CITY INSPECTION REPORT
   d. UPDATED PANEL SCHEDULES, C/W ELECTRICAL COMPANY'S NAME AND DATED
   e. SHOP DRAWINGS
   f. AS BUILTS
   g. LOAD BALANCING REPORT.
   h. MECHANICAL EQUIPMENT START UP REPORTS.
   i. LIST OF SUPPLIERS C/W ADDRESS AND PHONE NUMBERS.
   j. SEISMIC REVIEW LETTER.
   k. EMERGENCY LIGHTING LETTER.

19. SUPPLY ALL NECESSARY TOOLS, EQUIPMENT AND PERSONNEL AND PROVIDE DEMONSTRATION AND TRAINING TO OPERATING AND MAINTENANCE PERSONNEL IN OPERATING, CONTROLLING, ADJUSTING, TROUBLESHOOTING AND SERVICING OF ALL SYSTEMS AND EQUIPMENT DURING REGULAR WORK HOURS, PRIOR TO ACCEPTANCE.

20. AFTER AWARD OF CONTRACT, SUBMIT A DETAILED COST BREAKDOWN INDICATING MATERIAL AND LABOUR COSTS FOR EACH PORTION OF THE WORK, INCLUDING DEMOLITION, LIGHTING, POWER DISTRIBUTION, COMMUNICATIONS, FIRE ALARM, ETC. TO BE APPROVED BY THE ENGINEER.

21. EXISTING ELECTRICAL SYSTEMS HAVE BEEN ONLY PARTIALLY INDICATED. REGARD INFORMATION RELATED TO EXISTING INSTALLATION AS A GUIDE ONLY. DETERMINE STATUS, QUANTITIES AND LOCATION OF EQUIPMENT AND SYSTEMS, ON SITE, PRIOR TO COMMENCEMENT OF REMOVAL AND/OR EXTENSION OF SAME.

22. THE DRAWINGS SHALL BE CONSIDERED TO SHOW THE GENERAL CHARACTER AND SCOPE OF THE WORK AND NOT THE EXACT DETAILS OF THE INSTALLATION. THE INSTALLATION SHALL BE COMPLETE WITH ALL ACCESSORIES REQUIRED FOR A COMPLETE AND OPERATIVE INSTALLATION.

23. THESE ELECTRICAL DRAWINGS AND SPECIFICATIONS MUST BE READ IN CONJUNCTION WITH THE ARCHITECTURAL AND MECHANICAL DRAWINGS AND SPECIFICATIONS.

24. THE WORD "PROVIDE" SHALL DENOTE "SUPPLY, INSTALL, CONNECT AND TEST".

25. LABELING:
   a. FOR ALL NEW, RELOCATED AND EXISTING-TO-REMAIN ELECTRICAL DEVICES WITHIN THE CONTRACT AREA, PROVIDE CLEAR "BROTHER P-TOUCH" LABELS INDICATING CIRCUIT AND PANEL AT ALL EQUIPMENT, DEVICES, RECEPTACLES AND JUNCTION BOXES. FOR DEDICATED RECEPTACLE, INCLUDE THE WORD "DED" C/W CIRCUIT NUMBER. FOR EXIT LIGHTS, PROVIDE BLACK LETTERING ON RED BACKGROUND.
   b. PROVIDE LAMACOID LABELS ON DISCONNECT SWITCHES, MOTOR STARTERS, TRANSFORMERS AND PANELS. CLEARLY INDICATE EQUIPMENT CONTROLLED OR AREA SERVICED AS WELL AS FEEDER SOURCE. INDICATE FUSE SIZE AND TYPE ON FUSED DISCONNECTS SWITCHES. LETTERING TO BE BLACK ON WHITE BACKGROUND, MINIMUM 25mm HIGH.
   c. TRACE EXISTING CIRCUITS AND UPDATE PANEL SCHEDULES.

26. PROVIDE CUTTING, PATCHING AND CORING OF ALL WALLS, CEILINGS AND OTHER SURFACES REQUIRED TO FIT THE ELECTRICAL EQUIPMENT. CHECK WITH BUILDING MANAGEMENT PRIOR TO CORE DRILLING AND CUTTING OF FLOOR SLAB, REGARDING BUILDING REQUIREMENTS AND POLICIES. PRIOR TO SLAB CUTTING OR CORING, FIRST SCAN THE SLAB AND COORDINATE DRILLING TO MINIMIZE CUTTING OF THE REINFORCING STEEL. FIRE STOP ALL NEW FIRE RATED PENETRATIONS. THE CONTRACTOR IS TO INCLUDE IN TENDER PRICE ALL WORK ASSOCIATED WITH CORE DRILLING AFTER NORMAL WORKING HOURS. OBTAIN WRITTEN VERIFICATION OF THE LOCATIONS FROM THE ARCHITECT AND/OR INTERIOR DESIGNER PRIOR TO DRILLING. CUTTING TORCHES SHALL NOT BE USED FOR MAKING HOLES. PATCH ALL HOLES THROUGH SLAB WITH FIRE-STOP CAULKING (ULC LISTED). PATCHED SURFACES ARE TO BE PRIME FINISHED, READY FOR FINAL COVERING BY OTHERS.

27. SEISMIC RESTRAINT SYSTEM (SRS):
   a. GENERAL:
      a.a. PROVIDE DESIGN, SUPPLY AND INSTALLATION OF COMPLETE SRS FOR ALL SYSTEMS, EQUIPMENT SPECIFIED FOR INSTALLATION ON THIS PROJECT AS PER ONTARIO BUILDING CODE (2012), CSA S832-06(R.2011).
      a.b. DESIGN TO BE BY PROFESSIONAL ENGINEER SPECIALIZING IN DESIGN OF SRS AND REGISTERED IN PROVINCE OF ONTARIO. INCLUDE ALL COSTS ASSOCIATED WITH THIS WORK AS IT RELATES TO DIVISION 26, 27 INSTALLATIONS. SUBMIT DESIGN SKETCHES C/W PROFESSIONAL STAMP PRIOR TO START OF INSTALLATIONS, C/W INSTALLATION REQUIREMENTS.
      a.c. ACCEPTABLE MATERIALS: KORFUND-SAMPSON, MASON INDUSTRIES, TELCOUSTICS, VIBRA-SONIC CONTROL, VIBRON.
      a.d. SUBMITTALS TO INCLUDE FULL DETAILS OF DESIGN CRITERIA.
      a.e. SUBMIT ADDITIONAL COPY OF SHOP DRAWINGS AND PRODUCT DATA TO STRUCTURAL ENGINEER FOR REVIEW OF CONNECTION POINTS TO BUILDING STRUCTURE.
      a.f. INSTALL VIBRATION ISOLATION EQUIPMENT IN ACCORDANCE WITH MANUFACTURER'S INSTRUCTIONS AND ADJUST MOUNTINGS TO LEVEL EQUIPMENT. ENSURE PIPE, DUCT AND ELECTRICAL CONNECTIONS TO ISOLATED EQUIPMENT DO NOT REDUCE SYSTEM FLEXIBILITY. ENSURE THAT PIPE, CONDUIT AND DUCT PASSING THROUGH WALLS AND FLOORS DO NOT TRANSMIT VIBRATIONS.

28. ANCHORING METHODS:
   a. ELECTRICAL EQUIPMENT, FIXTURES, CABLE TRAY, CONDUIT AND CABLING IS TO BE SECURELY ANCHORED OR FASTENED TO THE BUILDING STRUCTURE USING DRILLED HOLE WEDGE ANCHORS FOR CONCRETE STRUCTURES OR STEEL CLAMPS FOR STEEL STRUCTURES.
      a.a. AIR, FUEL OR POWDER ACTUATED DEVICES OR ANY OTHER EQUIVALENT TYPE OF FASTENING DEVICES ARE NOT TO BE USED.
      a.b. WHERE ANCHORING METHOD FORMS PART OF SEISMIC RESTRAINT REQUIREMENTS, ANCHORING METHODS TO COMPLY WITH SEISMIC RESTRAINT SYSTEMS (SRS).

29. GROUNDING AND BONDING:
   a. PROVIDE GROUNDING AND BONDING OF ALL EQUIPMENT WITH APPROVED FITTINGS AND CONDUCTORS OF AMPLE CAPACITY IN ACCORDANCE WITH ONTARIO ELECTRICAL SAFETY CODE. ALL CONDUCTORS SHALL HAVE GREEN INSULATION OR BE COLOUR CODED WITH PERMANENTLY ATTACHED GREEN TAPE 21mm WIDE AT EACH END. PROVIDE INSULATED GROUND/BONDING CONDUCTOR IN EACH CONDUIT.

30. WIRING AND RACEWAYS:
   a. ALL INTERIOR WIRING SHALL BE COPPER RW90 #12 CONDUCTOR MINIMUM.
   b. ALL EXTERIOR UNDERGROUND WIRING TO BE COPPER RWU-90, MINUS 40 C RATED.
   c. AC-90 (BX) MAY BE USED IN REMOVABLE CEILINGS AND METAL PARTITION WALLS, MAXIMUM LENGTH 3 METERS.
   d. ALL NEW RACEWAYS SHALL BE THIN WALL ELECTRICAL METALLIC TUBING (EMT) UNLESS OTHERWISE INDICATED. CONDUITS TO BE COMPLETE WITH STEEL SET-SCREW COUPLINGS AND CONNECTORS AND NYLON BUSHING.
   e. USE LIQUID TIGHT FLEXIBLE METAL CONDUIT FOR CONNECTION TO MOTORS.
   f. USE LIQUID TIGHT FLEXIBLE METAL CONDUIT FOR CONNECTION TO EQUIPMENT IN DAMP, WET OR CORROSIVE LOCATIONS.
   g. SURFACE CONDUIT TO RUN PARALLEL OR PERPENDICULAR TO BUILDING LINES.
   h. ALL CONDUITS AND JUNCTION BOXES TO BE ANCHORED TO THE BUILDING STRUCTURE.
   i. PROVIDE A POLYPROPYLENE PULL STRING IN ALL EMPTY CONDUITS.
   j. EXISTING FEEDERS RELOCATED UNDER THIS CONTRACT TO BE REWIRED: SPLICE NEW WIRE TO EXISTING WIRE FROM JUNCTION BOX TO JUNCTION BOX, OR FROM JUNCTION BOX TO EXISTING EQUIPMENT.
   k. CONTRACTOR MAY RE-USE EXISTING CONDUIT AND/OR GRID PULL BOXES WHERE SUITABLE FOR RE-USE WITH NEW OR RELOCATED RUNS.
   l. REMOVE AND DISPOSE OF ANY REDUNDANT EXISTING WIRING.
   m. 120V CIRCUITS OF LENGTH GREATER THAN 25m TO BE #10 AWG MINIMUM OR AS REQUIRED TO LIMIT VOLTAGE DROP WITHIN CODE SPECIFIED VALUE.
   n. MINIMUM SIZE CONDUIT TO BE 21mm UNLESS SPECIFIED OTHERWISE.

31. DEVICES: SWITCHES AND RECEPTACLES TO BE SPECIFICATION GRADE WITH COVER PLATES AND COLOUR AS SPECIFIED. INSTALL & MOUNT TO CODES AND STANDARDS. COORDINATE EXACT LOCATIONS WITH ARCHITECTURAL AND/OR INTERIOR DESIGNER'S DRAWINGS.

WIRING DEVICES COLOUR CODING:

	DEVICE	COVER PLATE
STANDARD RECEPTACLE	WHITE	WHITE
LIGHT SWITCH	WHITE	WHITE

32. MOUNTING HEIGHTS:

UNLESS NOTED OTHERWISE, MOUNTING HEIGHT FOR ALL ELECTRICAL DEVICES SHALL MEET "BARRIER-FREE" CODE REQUIREMENTS:

a. 16" A.F.F. FOR RECEPTACLES, VOICE/DATA OUTLETS, ETC.
b. 43-1/4" A.F.F. FOR LIGHT SWITCHES, ETC.
c. 6-3/4" ABOVE TOP OF COUNTERS OR COUNTER BACK SPLASHES.
d. 48" A.F.F. FOR PULL STATIONS, THERMOSTATS
e. 82-1/2" A.F.F. FOR WALL MOUNTED PA SPEAKERS, SCHOOL BELLS, CLOCKS, ETC.

33. LUMINAIRES:
   a. PROVIDE LIGHTING FIXTURES, COMPLETE WITH LAMPS, AS INDICATED IN LIGHT FIXTURE SCHEDULE.

34. FIXTURE INSTALLATION: DO NOT MOUNT FIXTURES ABOVE PIPES, DUCTS OR EQUIPMENT. CHECK LAYOUTS OF WORK BY OTHER TRADES ON PROJECTS AND PLAN COOPERATIVELY WITH OTHERS TO AVOID CONFLICT. PROVIDE LONGER HANGERS TO CLEAR OBSTRUCTIONS, IN EVENT OF UNAVOIDABLY TIGHT LOCATIONS. PROVIDE CHAIN HANGERS FOR ALL FIXTURES IN T-BAR CEILINGS.

35. EXIT LIGHTS:
   a. EXIT:
      a.a. TO CSA C22.2 NO.141-10 AND CSA C860.
      a.b. HOUSING: EXTRUDED ALUMINUM, WHITE FINISH.
      a.c. FACE AND BACK PLATES: EXTRUDED ALUMINUM.
      a.d. LAMPS: LED WITH 25-YEAR RATED LIFE.
   b. PICTOGRAM: ALUMINUM FRAME, OPAL DIFFUSER PANEL, PICTOGRAM PANEL WITH MULTIPLE FILMS FOR DIRECTION SELECTION, AND CLEAR PROTECTIVE PANEL. PICTOGRAM PANEL SHALL CONSIST OF GREEN PICTOGRAM AND WHITE GRAPHIC SYMBOL MEETING THE VISIBILITY SPECIFICATIONS REFERRED TO IN ISO 3864-1, AND CONFORM TO THE DIMENSIONS INDICATED IN ISO 7010.
   c. SUITABLE FOR 347V OR 120V NORMAL SUPPLY AND 12VDC EMERGENCY SUPPLY.
   d. DIE CAST MOUNTING BRACKET FOR WALL, CEILING, OR END MOUNTING AS INDICATED.
   e. PROVIDE CIRCUIT LABELS AT ALL EXIT SIGNS.
   f. EQUAL TO: EMERGI-LITE EA SERIES.

36. UNIT EQUIPMENT FOR EMERGENCY LIGHTING:
   a. PROVIDE EMERGENCY LIGHTING AS SHOWN ON DRAWINGS AND AS SPECIFIED HEREIN. USE 12V DC UNITS CONSISTING OF A SEALED LEAD BATTERY UNIT, WITH HI-LO SOLID STATE CHARGER, CONTROLS, TEST SWITCH, A.C. AND HI-CHARGE PILOT LIGHTS, VOLTMETER, AMMETER, LONG LIFE, SEALED, LEAD BATTERY IN 18-GAUGE STEEL CASE COMPLETE WITH MOUNTING BRACKET. UNIT TO BE PROVIDED WITH 3-CONDUCTOR POWER CORD TO PLUG INTO WALL MOUNTED RECEPTACLE.
   b. EMERGENCY LIGHTS ARE NORMALLY OFF, AND BATTERY TO BE KEPT FULLY CHARGED BY AUTOMATIC CHARGER. ON FAILURE OF NORMAL POWER, EMERGENCY LIGHTS MUST COME ON AUTOMATICALLY.
   c. PROVIDE BATTERY UNITS WITH SUFFICIENT CAPACITY TO PROVIDE 87.5% VOLTAGE AFTER 30 MINUTES OPERATION WITH CONNECTED LOAD PLUS 50W SPARE CAPACITY. BATTERY TO CARRY A 10 YEAR PRO-RATA WARRANTY IN ADDITION TO THE 12 MONTH GUARANTEE ON TOTAL UNIT.
   d. REMOTE LIGHTING HEADS TO BE 12W, 12V, 100 HOUR MR16 LAMPS IN DIE CAST METAL HEAD WITH FULLY ADJUSTABLE AIMING. RUN WIRING IN CONDUIT MINIMUM #10 AWG OR AS RECOMMENDED BY MANUFACTURER, VOLTAGE DROP AT ANY REMOTE HEAD SHALL NOT EXCEED 5%.
   e. FEED EMERGENCY SOCKET IN EXIT LIGHTS FROM A BATTERY UNIT, AND CONNECT REMOTE LIGHTING HEADS.

37. DISCONNECT SWITCHES:
   a. HEAVY DUTY FUSIBLE AND NON-FUSIBLE DISCONNECT SWITCH IN CSA ENCLOSURE 2 (SPRINKLER PROOF), SIZED AS INDICATED. CSA 3 ENCLOSURE IN OUTDOOR OR DAMP LOCATIONS. ARC QUENCHER AND VISIBLE BLADE, QUICK MAKE, QUICK BREAK TYPE.
   b. PROVISION FOR PADLOCKING IN OFF SWITCH POSITION.
   c. MECHANICALLY INTERLOCKED DOOR TO PREVENT OPENING WHEN HANDLE IN ON POSITION.
   d. FUSES: SIZE AS INDICATED, HRCJ (TIME DELAY TYPE).

38. MOTOR STARTERS:
   a. MANUAL MOTOR STARTERS: HEAVY DUTY C/W ONE OVERLOAD PER PHASE, PILOT LIGHT, QUICK MAKE, QUICK BREAK TOGGLE SWITCH, LOCKING TABS IN "OFF" POSITION. CSA CERTIFIED AS A DISCONNECTING MEANS.

39. MECHANICAL EQUIPMENT WIRING: PROVIDE ALL WIRING TO MECHANICAL EQUIPMENT, OBTAIN MECHANICAL SHOP DRAWINGS AND RECONFIRM FEEDER AND BREAKER REQUIREMENTS PRIOR TO INSTALLATION.

40. PANELBOARDS:
   a. INSTALL CIRCUIT BREAKERS IN PANELBOARDS BEFORE SHIPMENT.
   b. IN ADDITION TO CSA REQUIREMENTS MANUFACTURER'S NAMEPLATE MUST SHOW FAULT CURRENT THAT PANEL INCLUDING BREAKERS HAS BEEN BUILT TO WITHSTAND.
   c. 250V AND 600V BUSSES AND BREAKERS RATED FOR 10kA AND 14kA (SYMMETRICAL) INTERRUPTING CAPACITY MINIMUM RESPECTIVELY, OR AS INDICATED OTHERWISE.
   d. SEQUENCE PHASE BUSSING WITH ODD NUMBERED BREAKERS ON LEFT AND EVEN ON RIGHT, WITH EACH BREAKER IDENTIFIED BY PERMANENT NUMBER IDENTIFICATION AS TO CIRCUIT NUMBER AND PHASE.
   e. MAINS, NUMBER OF CIRCUITS, AND NUMBER AND SIZE OF BRANCH CIRCUIT BREAKERS AS INDICATED.
   f. TWO KEYS FOR EACH PANELBOARD AND KEY PANELBOARDS ALIKE.
   g. MAINS SUITABLE FOR BOLT-ON BREAKERS.
   h. TRIM WITH CONCEALED FRONT BOLTS AND HINGES. 14 GAUGE UP TO 24 CIRCUIT,12 GAUGE FOR LARGER PANELS.
   i. DISTRIBUTION PANELS SHALL BE MINIMUM 12 GAUGE CONSTRUCTION.
   j. COPPER BUSSING AND GROUND.

41. MOLDED CASE CIRCUIT BREAKERS:
   a. BOLT-ON MOLDED CASE CIRCUIT BREAKER: QUICK-MAKE, QUICK-BREAK TYPE, FOR MANUAL AND AUTOMATIC OPERATION WITH TEMPERATURE COMPENSATION FOR 40 C AMBIENT.
   b. COMMON-TRIP BREAKERS: WITH SINGLE HANDLE FOR MULTI-POLE APPLICATIONS.
   c. CIRCUIT BREAKERS WITH INTERCHANGEABLE TRIPS AS INDICATED.
   d. MOLDED CASE CIRCUIT BREAKER TO OPERATE AUTOMATICALLY BY MEANS OF THERMAL AND MAGNETIC TRIPPING DEVICES TO PROVIDE INVERSE TIME CURRENT TRIPPING AND INSTANTANEOUS TRIPPING FOR SHORT CIRCUIT PROTECTION.

42. FIELD QUALITY CONTROL
   a. CONDUCT AND PAY FOR THE FOLLOWING TESTS:
      a.a. 600V AND 120V POWER DISTRIBUTION INCLUDING PHASING, VOLTAGE, GROUNDING AND LOAD BALANCING.
      a.b. LIGHTING AND CONTROLS
      a.c. MOTORS, HEATERS AND ASSOCIATED CONTROL EQUIPMENT
      a.d. INSULATION INTEGRITY TESTING
      a.e. HOT SPOT TESTING BY INFRARED SCANNER
   b. SUBMIT TEST PROCEDURES AND INFORM ENGINEER AT LEAST 7 DAYS BEFORE SCHEDULED TESTS. ENGINEER TO WITNESS TESTS AT HIS DISCRETION.

GENERAL NOTES:

1. ELECTRICAL WORK TO BE DONE IN ACCORDANCE WITH THE ELECTRICAL SAFETY CODE OF ONTARIO, AND WITH NEW ARCHITECTURAL/INTERIOR DESIGNER'S LAYOUT (LOCATION/MOUNTING HEIGHTS). CONTRACTOR TO OBTAIN ALL NECESSARY PERMITS, PAY ALL APPLICABLE FEES AND INSPECTION COSTS.
2. COORDINATE WORK WITH ALL OTHER TRADES TO AVOID INTERFERENCE.
3. ENSURE ELECTRICAL COMPONENTS (IE. WIRING, CONDUIT, ETC.) RELATING TO THE AREA OF WORK ARE INDEPENDENTLY SECURED TO COMPLY WITH CODE REQUIREMENTS. IT IS NOT ACCEPTABLE TO SECURE THE COMPONENTS TO DUCTWORK, DUCT WORK TO CONDUIT, OR ANY OTHER SYSTEMS.
4. ENSURE ALL EXISTING CEILING MOUNTED BOXES ARE CLOSED PRIOR TO COMPLETION OF PROJECT. PROVIDE LABELLED AND COLOUR CODED COVER PLATES (IE. PANEL NAME AND CIRCUIT NUMBER) AS REQUIRED.
5. MINIMUM THREE (3) WORKING DAYS PRIOR TO CLOSING CEILING, NOTIFY THE ENGINEER FOR CEILING INSPECTION.

LIGHTING NOTES:

1. CLEAN LAMPS, LENSES, INTERIOR AND VISIBLE SURFACES OF LUMINAIRES. REPLACE DEFECTIVE LAMPS, BALLAST AND DAMAGED LENSES.
2. LUMINAIRES IN CONSTRUCTION AREA ARE TO BE INDEPENDENTLY SUPPORTED, INCLUDING EXISTING TO REMAIN, RELOCATED AND NEW, TO COMPLY WITH CODE REQUIREMENTS.
3. ADD AND CONNECT LIGHT FIXTURES TO SUIT INDICATED LAYOUT, EXTEND CONDUIT AND WIRING AS NECESSARY AND CONNECT LUMINAIRES TO EXISTING CIRCUITS. TURN OVER SURPLUS FIXTURES TO OWNER.

EXIT LIGHTS:

1. CONNECT EXIT LIGHTS TO AC AND DC SUPPLIES.
2. ADD/REMOVE DIRECTIONAL ARROWS TO SUIT FLOOR PLAN LAYOUT.

POWER NOTES:

1. ENSURE EXISTING REMAINING OUTLETS IN AFFECTED AREA ARE FUNCTIONAL.
2. DO NOT MOUNT WALL OUTLETS BACK TO BACK. LEAVE MINIMUM 12" SPACE BETWEEN OUTLETS. STAGGER OUTLETS WITHIN ALTERNATE STUD CAVITIES. DO NOT ANCHOR BACK TO BACK OUTLETS TO THE SAME STUD.

COMMUNICATION NOTES:

1. REMOVAL OF TELECOMMUNICATION CABLING IS BY OWNER, UNLESS OTHERWISE NOTED.
2. UNLESS OTHERWISE NOTED PROVIDE PLASTER RINGS FOR OUTLETS WITH OUTLET BOXES 4" SQUARE X 2 1/2" DEEP EACH WITH 3/4" EMPTY CONDUIT TO CEILING SPACE C/W BUSHING AND PULL STRINGS. NEW TEL AND/OR DATA CABLES, TERMINAL DEVICES AND COVER PLATES WILL BE SUPPLIED AND INSTALLED BY OTHERS.

COLOR CODING:

APPLICABLE TO NEW OR RELOCATED WORK UNLESS OTHERWISE NOTED.

1. TO CONFORM TO CLIENT'S BUILDING CODING SYSTEM.
2. COLOUR CODE CONDUITS AND BOXES.
3. CODE WITH PLASTIC TAPE OR PAINT WHERE CONDUITS ENTER WALLS, CEILING, OR FLOOR AND AT 45' INTERVALS.
4. COLOURS: 1" WIDE PRIME COLOUR AND 3/4" WIDE AUXILIARY COLOUR.

SERVICE	PRIME COLOUR	AUXILIARY COLOUR
UP TO 250V	BLUE	
TELECOMMUNICATION	GREEN	

OUTLETS LOCATION:

1. EXACT LOCATION AND MOUNTING HEIGHTS OF OUTLETS TO BE COORDINATED WITH INTERIOR DESIGNER/ARCHITECTURAL DRAWINGS PRIOR TO ROUGH IN. REFER TO ARCHITECTURAL/DESIGNER DRAWINGS FOR MILLWORK, FURNITURE, SCREENS, COMPONENTS (I.E. TV, DRINKING FOUNTAIN, ETC.) FOR REQUIREMENTS.
2. BRING TO THE ATTENTION OF THE ARCHITECT / INTERIOR DESIGNER AND ENGINEER ANY CONFLICTS OR REQUIRED CLARIFICATION.
3. FAILING TO COORDINATE, THE CONTRACTOR WILL MODIFY THE INSTALLATION AT HIS EXPENSE, IF REQUIRED.

POWER LEGEND

SYMBOL	DESCRIPTION
	15A, 120V WALL MOUNTED DUPLEX RECEPTACLE
	DEDICATED DUPLEX RECEPTACLE
GFI	GROUND FAULT INTERRUPTING RECEPTACLE
	SPECIAL RECEPTACLE
C	CEILING MOUNTED RECEPTACLE
	QUADRUPLEX RECEPTACLE
	5-20R RECEPTACLE
	CONDUIT DOWN
	CONDUIT UP
	CEILING POWER BOX
J	120V JUNCTION BOX, 250x250x150mm UNLESS NOTED OTHERWISE
	RECESSED ELECTRICAL PANEL
	COMBINATION MAGNETIC MOTOR STARTER
	THREE PHASE ELECTRIC MOTOR
	DISCONNECT SWITCH
	SURFACE MOUNTED ELECTRICAL PANEL
	FLEXIBLE CONDUIT
CR	CARD READER
ES	ELECTRICAL STRIKE
+	HARD WIRE CONNECTION
	RAISED FLOOR MONUMENT
	COMBINATION DATA/COMMUNICATIONS OUTLET BOX

LIGHTING LEGEND

SYMBOL	DESCRIPTION
1	LIGHT FIXTURE - TYPE AS SHOWN
2 3	LIGHT FIXTURES ON EMERGENCY POWER - DO NOT SWITCH
4	CEILING MOUNTED LIGHT FIXTURE - TYPE AS SHOWN
5	WALL MOUNTED EXTERIOR LIGHT FIXTURE - TYPE AS SHOWN
$	WALL MOUNTED SWITCH - M.H. 1100mm A.F.F.
$LV	LOW VOLTAGE SWITCH
$D	DIMMER SWITCH - M.H. 1200mm A.F.F.
OS	CEILING MOUNTED OCCUPANCY SENSOR
	4-GANG LIGHT SWITCH
	CEILING MOUNTED EXIT LIGHT, SINGLE OR DOUBLE-FACE AS SHOWN
	WALL MOUNTED EXIT LIGHT, SINGLE OR DOUBLE-FACE AS SHOWN
F	FIRE ALARM HORN/STROBE
F	FIRE ALARM PULL STATION
F	FIRE ALARM SPEAKER - CEILING MOUNTED
S	PUBLIC SPEAKER (P/A) SPEAKER, CEILING MOUNTED
	COMBINATION EXIT LIGHT, BATTERY UNIT & REMOTE HEADS
MS	CEILING MOUNTED MOTION SENSOR SWITCH
	WALL MOUNTED EMERGENCY REMOTE LIGHTING HEADS
	EMERGENCY BATTERY UNIT C/W REMOTE LIGHTING HEADS

DRAWING LIST

	DESCRIPTION
E1	ELECTRICAL LEGENDS, SPECIFICATIONS & DRAWING LIST
E2	ELECTRICAL SITE PLAN
E3	ELECTRICAL SINGLE LINE DIAGRAM
E4	LIGHTING & FIRE ALARM DEMOLITION & NEW WORK
E5	POWER & SYSTEMS DEMOLITION & NEW WORK

ABBREVIATION LEGEND

ABBREVIATION	DESCRIPTION
C	CEILING MOUNTED
E	EXISTING, TO REMAIN
S	SURFACE MOUNTED
GFI	GROUND FAULT INTERRUPTING
N	NEW
OC	OVER COUNTER
R	EXISTING, TO BE DISCONNECTED AND REMOVED

LINETYPE LEGEND

LINETYPE	DESCRIPTION
	EXISTING
	NEW WORK
	DEMOLITION WORK
	ARCHITECTURAL GRID LINES
	CEILING GRID

Client

DATE	REVISION	REF
2019-06-18	ISSUED FOR SITE PLAN	2
2018-12-05	ISSUED FOR TENDER	1
2018-11-02	ISSUED FOR PERMIT	0
2018-10-19	ISSUED FOR COORDINATION	-
2018-09-28	ISSUED FOR 66% REVIEW	-

THE ENGINEER WAIVES ANY AND ALL RESPONSIBILITY AND LIABILITY FOR PROBLEMS WHICH ARISE FROM FAILURE TO FOLLOW THESE PLANS, SPECIFICATIONS AND THE DESIGN INTENT THEY CONVEY, OR FOR PROBLEMS WHICH ARISE FROM OTHER FAILURE TO OBTAIN AND / OR FOLLOW THE ENGINEER'S GUIDANCE WITH RESPECT TO ANY ERRORS, OMISSIONS, INCONSISTENCES, AMBIGUITIES OR CONFLICTS WHICH ARE ALLEGED.

THIS DRAWING IS THE PROPERTY OF GOODKEY WEEDMARK & ASSOCIATES LIMITED AND ALL COPYRIGHTS ARE R

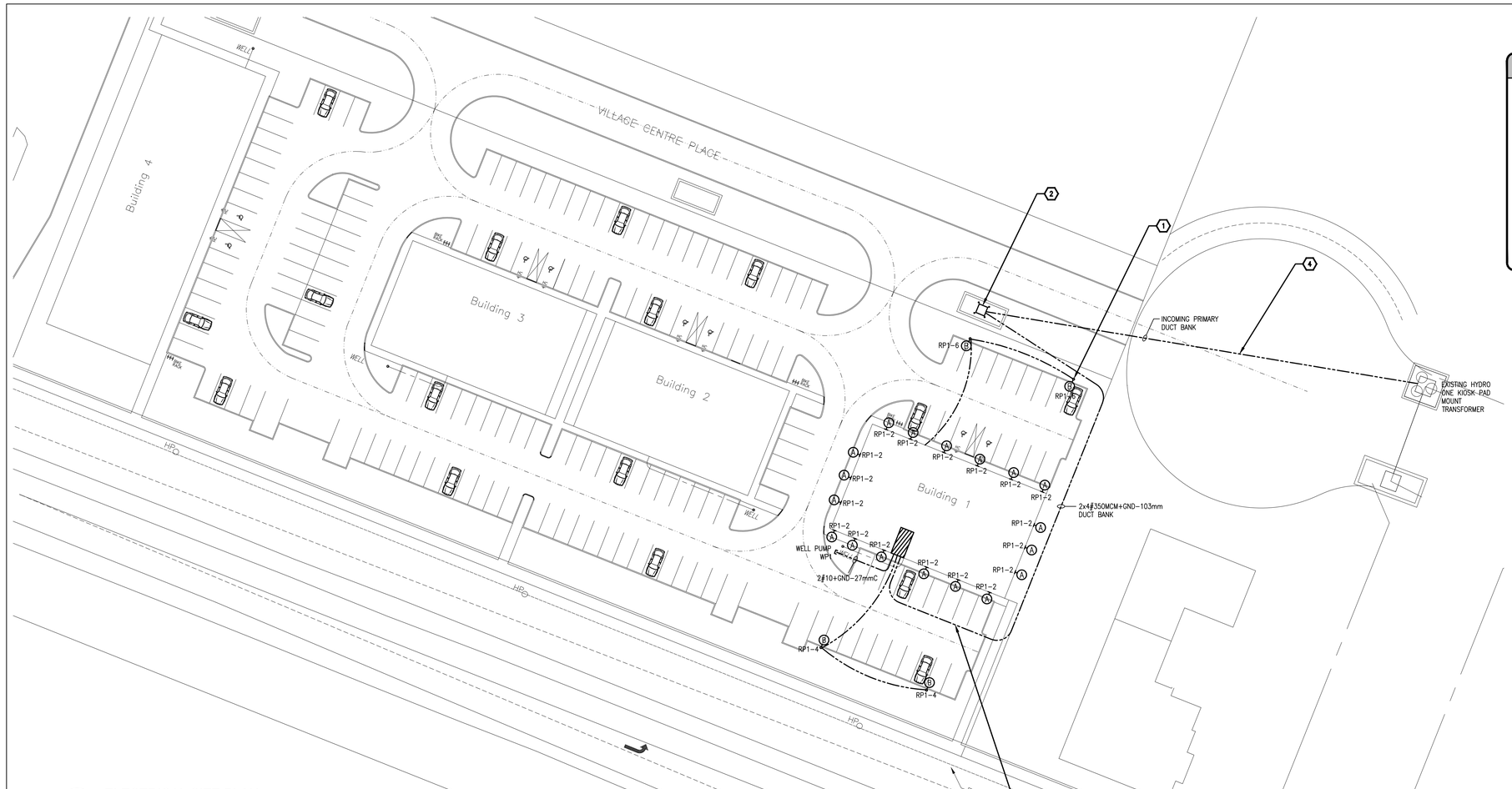

1 / E2 ELECTRICAL SITE PLAN

1/32"=1'0"

DRAWING NOTES

1. TYPICAL
PROVIDE NEW LIGHT FIXTURE TYPE AS INDICATED. REFER TO LIGHT FIXTURE SCHEDULE ON THIS DRAWING. PROVIDE PHOTOCELL AND TIMECLOCK C/W CONTACTORS AS REQUIRED TO CONTROL ALL OUTDOOR LIGHTING AND SIGNAGE.

2. NEW PADMOUNT TRANSFORMER BY HYDRO ONE. CONCRETE TRANSFORMER BASE TO BE SUPPLIED AND INSTALLED BY GENERAL TRADES AS PER USI DETAILS E10 AND E11. PROVIDE PROTECTIVE BOLLARDS AND GROUNDING AS PER HYDRO REQUIREMENTS AND AS INDICATED ON HYDRO ONE STANDARD DETAIL DU-03-212. PROVIDE GROUND GRID AS PER SPECIFICATIONS.

3. PROVIDE 2X(4#350MCM+GND-103mm) CONDUIT IN CONCRETE ENCASED DUCT BANK FROM NEW TRANSFORMER TO NEW MAIN ENTRANCE DISCONNECT SWITCH IN ELECTRICAL ROOM. PROVIDE FOUR (4) ADDITIONAL 103mm DUCTS FOR ROGERS AND BELL AND TWO (2) SPARES. REFERENCE DUCT BANK DETAIL ON THIS DRAWING.

4. PROVIDE NEW 3#2/0 ALUMINIUM, 28kV CONCENTRIC NEUTRAL PVC JACKETED PRIMARY CABLE AS INDICATED FROM EXISTING HYDRO ONE KIOSK TO PAD MOUNT TRANSFORMER AS SHOWN. PROVIDE TRENCHING AS PER HYDRO REQUIREMENTS AND AS INDICATED ON HYDRO ONE STANDARD DETAIL DU-03-209.

LIGHTING FIXTURE SCHEDULE

TYPE	DESCRIPTION	CATALOG NUMBER	LAMPS PER FIXTURE				VOLT	MOUNTING	REMARKS
			QTY	TYPE	WATTS	COLOUR			
A	EXTERIOR WALL SCONCE	STANDPRO LIGHTING	1	LED	21W	4100K	120V	SURFACE	COORDINATE EXACT LOCATION AND MOUNTING HEIGHT WITH
		WDX-LS1-W/G						WALL	ARCHITECTURAL DRAWINGS.
B	EXTERIOR LIGHTING STANDARD	STANDPRO LIGHTING	1	LED	45W	4000K	120V	POLE	C/W 20' ROUND STEEL POLE. PROVIDE POLE-TOP ADAPTERS AS REQUIRED.
		PES-L-S1-2-W-40K							

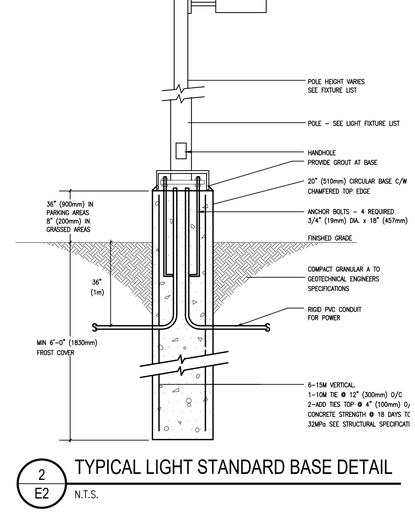

2 / E2 TYPICAL LIGHT STANDARD BASE DETAIL

N.T.S.

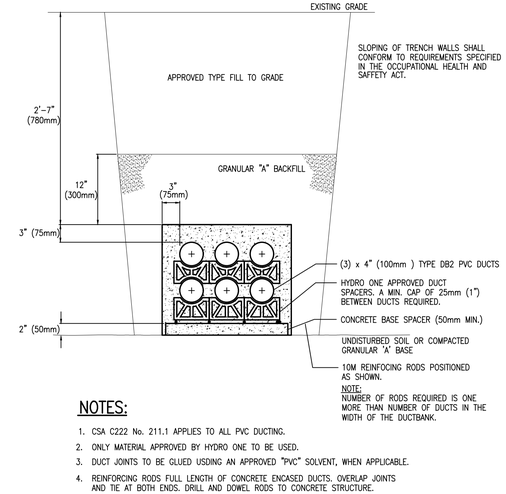

NOTES:

1. CSA C222 No. 211.1 APPLIES TO ALL PVC DUCTING.
2. ONLY MATERIAL APPROVED BY HYDRO ONE TO BE USED.
3. DUCT JOINTS TO BE GLUED USDING AN APPROVED "PVC" SOLVENT, WHEN APPLICABLE.
4. REINFORCING RODS FULL LENGTH OF CONCRETE ENCASED DUCTS. OVERLAP JOINTS AND TIE AT BOTH ENDS. DRILL AND DOWEL RODS TO CONCRETE STRUCTURE.
5. DUCT SPACERS TO BE PLACED AT A MAXIMUM OF 1500mm AND WITHIN 150mm OF COUPLING. PLASTIC DUCT SPACERS TO BE USED ONLY IF CONCRETE DUCT SPACERS ARE UNAVAILABLE.
6. FORMS REQUIRED FOR FULL LENGTH OF CONCRETE ENCASED DUCT STRUCTURE.
7. DUCTS AND TRENCHES MUST BE INSPECTED BY HYDRO ONE BEFORE ANY CONCRETE IS POURED.
8. ALL UNDERGROUND UTILITIES MUST BE CONTACTED AND ALL NECESSARY PERMITS MUST BE OBTAINED BY OWNER OR CONTRACTOR.
9. CONTRACTOR MUST ENSURE THAT ALL DUCTS ARE CLEANED, RODDED AND THAT A 6mm (1/4") POLYPROPYLENE ROPE IS LEFT IN EACH DUCT.

3 / E2 DUCT BANK DETAIL

N.T.S.

Client

DATE	REVISION	REF
2019-06-18	ISSUED FOR SITE PLAN	2
2018-12-05	ISSUED FOR TENDER	1
2018-11-02	ISSUED FOR PERMIT	0
2018-10-19	ISSUED FOR COORDINATION	-
2018-09-28	ISSUED FOR 66% REVIEW	-

THE ENGINEER WAIVES ANY AND ALL RESPONSIBILITY AND LIABILITY FOR PROBLEMS WHICH ARISE FROM FAILURE TO FOLLOW THESE PLANS, SPECIFICATIONS AND THE DESIGN INTENT THEY CONVEY, OR FOR PROBLEMS WHICH ARISE FROM OTHER FAILURE TO OBTAIN AND / OR FOLLOW THE ENGINEER'S GUIDANCE WITH RESPECT TO ANY ERRORS, OMISSIONS, INCONSISTENCES, AMBIGUITIES OR CONFLICTS WHICH ARE ALLEGED.

THIS DRAWING IS THE PROPERTY OF GOODKEY WEEDMARK & ASSOCIATES LIMITED AND ALL COPYRIGHTS ARE RESERVED. NO USE OF THIS DRAWING MAY BE MADE WITHOUT EXPRESS WRITTEN CONSENT.

DO NOT SCALE DRAWINGS

L'INGÉNIEUR DÉCLINE TOUTE RESPONSABILITÉ DÉCOULANT DE PROBLÈMES FAISANT SUITE AU NON RESPECT DES PLANS, DEVIS ET DE L'INTENTION DU CONCEPT QU'ILS INDIQUENT OU DE TOUS LES PROBLÈMES POUVANT RESULTER DU DÉFAUT D'OBTENIR ET / OU DE SUIVRE LES CONSEILS DE L'INGÉNIEUR EN CE QUI CONCERNE LES ERREURS, OMISSIONS, INCONSISTANCES, AMBIGUITÉS OU CONFLITS ALLÉGUÉS.

CE DESSIN EST LA PROPRIÉTÉ LITTÉRAIRE DE GOODKEY WEEDMARK & ASSOCIATES LIMITED ET TOUS LES DROITS SONT RÉSERVÉS. L'UTILISATION EST INTERDITE SANS LE CONSENTEMENT ÉCRIT DE L'AUTEUR.

NE PAS MESURER LES DESSINS À L'ÉCHELLE

Goodkey Weedmark
Consulting Engineers

GOODKEY WEEDMARK & ASSOCIATES LIMITED
1688 Woodward Dr. 613 727-5111 Voice
Ottawa Ontario 613 727-5115 Fax
Canada K2C 3R8 www.gwal.com Web

Project north
Nord du projet

Seal/Sceau

LICENSED PROFESSIONAL ENGINEER
JUN 18 2019
R. M. BOIVIN
100122674
PROVINCE OF ONTARIO

Project/Projet

VILLAGE CENTRE PLACE
NEW RETAIL BUILDING
6075 BANK STREET, GREELY, ON

Drawing title/Titre du dessin

ELECTRICAL
SITE PLAN

Scale / Echelle	AS NOTED	Project no./No. du projet	2018-509
Design by / Conçu par	A. GIRARD	Drawing/Dessin	E2
Drawn by / Dessiné par	A. GIRARD		OF 5
Reviewed by / Examiné par	R. BOIVIN		
Date / Date	JUNE 2019	Revision no: REVNO	Acad file/Fichier: -

XREFS: Z:\2018\2018-509\2018-509-Sheet.dwg Z:\2018\2018-509\Civil\C-FILL.dwg Z:\2018\2018-509\Arch\2018-509-arch.dwg Z:\2018\2018-509\Arch\2018-509-SITE.dwg

FILENAME: Z:\2018\2018-509\Elec\2018-509-E.dwg
PLOTDATE: Jun 18, 2019 - 3:28pm

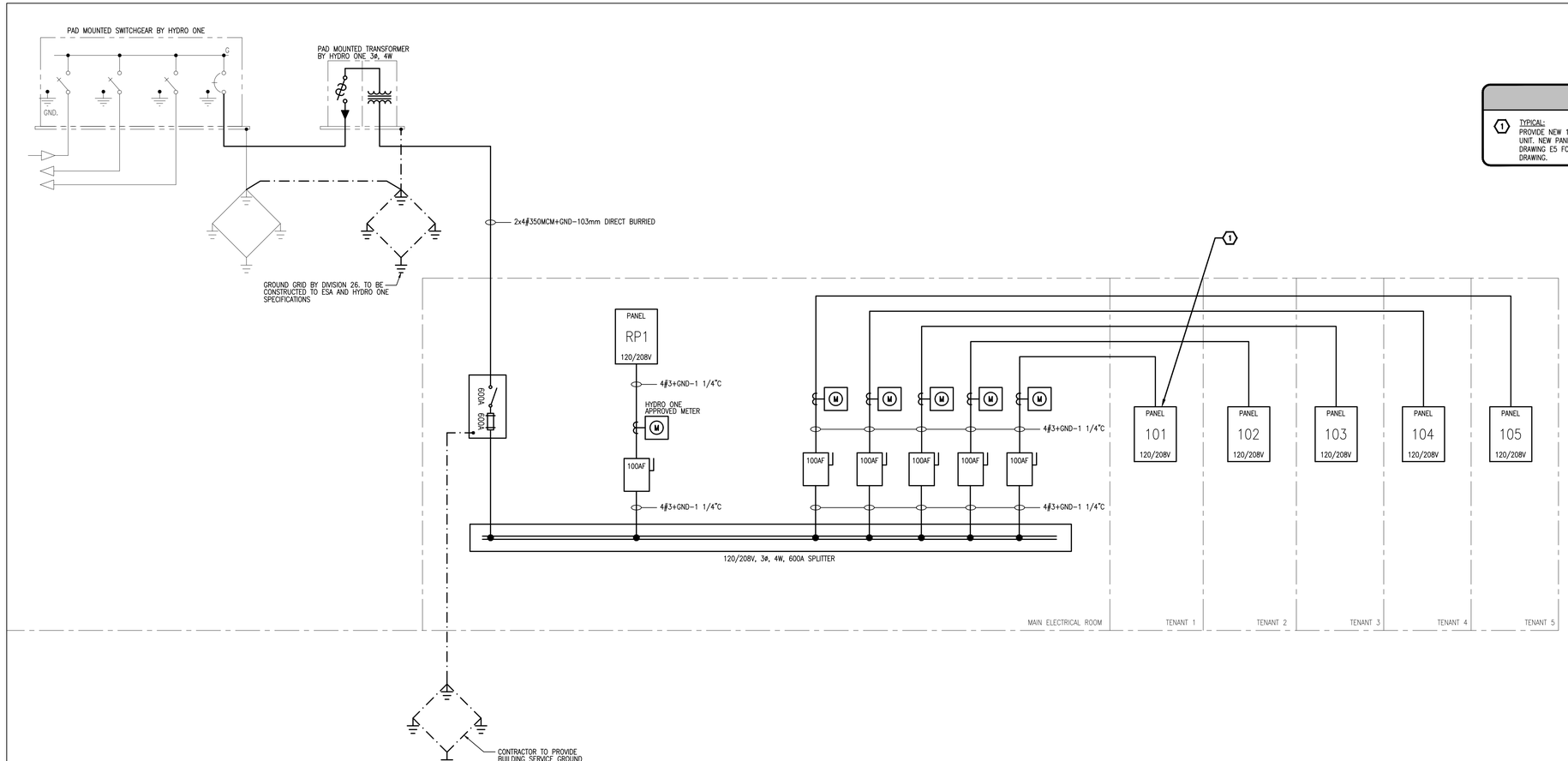

DRAWING NOTES

1. TYPICAL:
PROVIDE NEW 120/208V, 3ø, 4W, 100A, 42 CIRCUIT ELECTRICAL PANEL IN EACH UNIT. NEW PANEL SHALL BE COMPLETED WITH 100A MAIN BREAKER. REFER TO DRAWING E5 FOR FLOOR LAYOUT AND TYPICAL UNIT PANEL SCHEDULE ON THIS DRAWING.

NEW PANEL	RP1
VOLTAGE	120/208V
PHASE	3ø
WIRE	4W
RATING AMPS	225A
TRIM	SURFACE

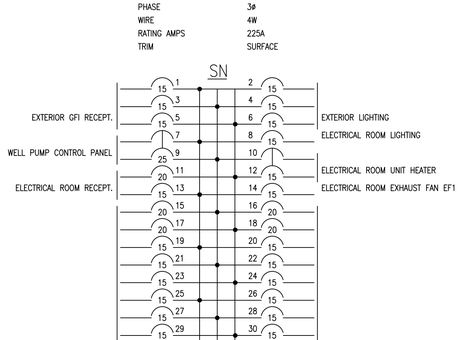

NEW PANEL	TYPICAL UNITS 101 & 105
VOLTAGE	120/208V
PHASE	3ø
WIRE	4W
RATING AMPS	225A
TRIM	SURFACE

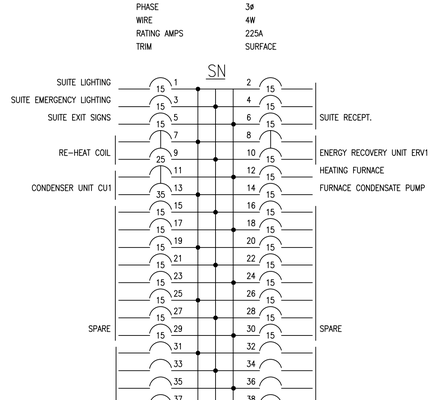

NEW PANEL	TYPICAL UNITS 102 TO 104
VOLTAGE	120/208V
PHASE	3ø
WIRE	4W
RATING AMPS	225A
TRIM	SURFACE

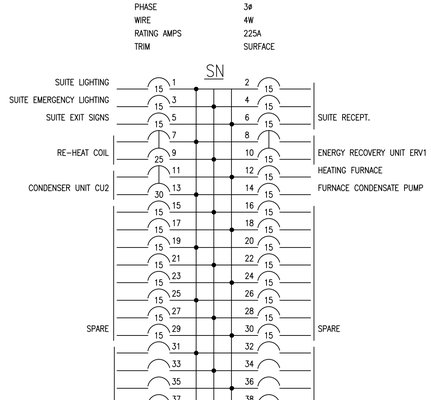

Client

DATE	REVISION	REF
2019-06-18	ISSUED FOR SITE PLAN	2
2018-12-05	ISSUED FOR TENDER	1
2018-11-02	ISSUED FOR PERMIT	0
2018-10-19	ISSUED FOR COORDINATION	–
2018-09-28	ISSUED FOR 66% REVIEW	–

THE ENGINEER WAIVES ANY AND ALL RESPONSIBILITY AND LIABILITY FOR PROBLEMS WHICH ARISE FROM FAILURE TO FOLLOW THESE PLANS, SPECIFICATIONS AND THE DESIGN INTENT THEY CONVEY, OR FOR PROBLEMS WHICH ARISE FROM OTHER FAILURE TO OBTAIN AND / OR FOLLOW THE ENGINEER'S GUIDANCE WITH RESPECT TO ANY ERRORS, OMISSIONS, INCONSISTENCES, AMBIGUITIES OR CONFLICTS WHICH ARE ALLEGED.

THIS DRAWING IS THE PROPERTY OF GOODKEY WEEDMARK & ASSOCIATES LIMITED AND ALL COPYRIGHTS ARE RESERVED. NO USE OF THIS DRAWING MAY BE MADE WITHOUT EXPRESS WRITTEN CONSENT.

DO NOT SCALE DRAWINGS

L'INGÉNIEUR DÉCLINE TOUTE RESPONSABILITÉ DÉCOULANT DE PROBLÈMES FAISANT SUITE AU NON RESPECT DES PLANS, DEVIS ET DE L'INTENTION DU CONCEPT QU'ILS INDIQUENT OU DE TOUS LES PROBLÈMES POUVANT RESULTER DU DÉFAUT D'OBTENIR ET / OU DE SUIVRE LES CONSEILS DE L'INGÉNIEUR EN CE QUI CONCERNE LES ERREURS, OMISSIONS, INCONSISTANCES, AMBIGUITÉS OU CONFLITS ALLÉGUÉS.

CE DESSIN EST LA PROPRIÉTÉ LITTÉRAIRE DE GOODKEY WEEDMARK & ASSOCIATES LIMITED ET TOUS LES DROITS SONT RÉSERVÉS. L'UTILISATION EST INTERDITE SANS LE CONSENTEMENT ÉCRIT DE L'AUTEUR.

NE PAS MESURER LES DESSINS À L'ÉCHELLE

Goodkey Weedmark
Consulting Engineers

GOODKEY WEEDMARK & ASSOCIATES LIMITED
1688 Woodward Dr.
Ottawa Ontario
Canada K2C 3R8
613 727-5111 Voice
613 727-5115 Fax
www.gwal.com Web

Project north
Nord du projet

Seal/Sceau

LICENSED PROFESSIONAL ENGINEER
JUN 18 2019
R. M. BOIVIN
100122674
PROVINCE OF ONTARIO

Project/Projet

VILLAGE CENTRE PLACE
NEW RETAIL BUILDING
6075 BANK STREET, GREELY, ON

Drawing title/Titre du dessin

ELECTRICAL SINGLE LINE DIAGRAM AND PANEL SCHEDULES

Scale / Echelle	AS NOTED	Project no./No. du projet	2018-509
Design by / Conçu par	A. GIRARD	Drawing/Dessin	E3
Drawn by / Dessiné par	A. GIRARD		
Reviewed by / Examiné par	R. BOIVIN		OF 5
Date	JUNE 2019	Revision no: REVNO	Acad file/Fichier: –

FILENAME: Z:\2018\2018-509\Elec\2018-509-E.dwg
PLOTDATE: Jun 18, 2019 – 3:28pm

XREFS: Z:\2018\2018-509\2018-509-Sheet.dwg Z:\2018\2018-509\Elec\E-FILL.dwg Z:\2018\2018-509\Arch\2018-509-arch.dwg Z:\2018\2018-509\Arch\2018-509-SITE.dwg

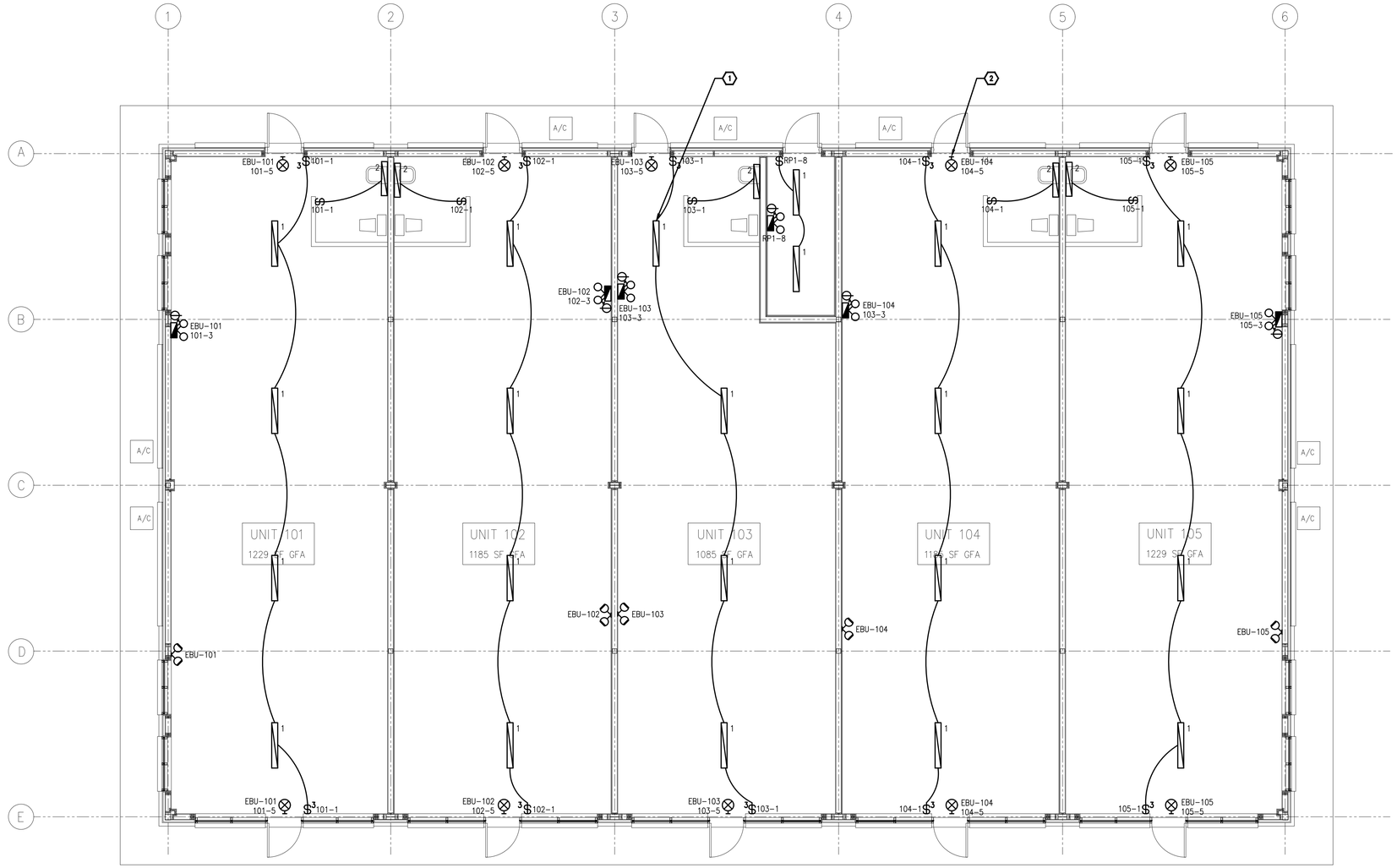

1
E4
LIGHTING NEW WORK
3/16"=1'0"

DRAWING NOTES

1. TYPICAL:
PROVIDE NEW LIGHT FIXTURE, TYPE AS INDICATED. REFERENCE LIGHT FIXTURE SCHEDULE ON THIS DRAWING.

2. TYPICAL:
PROVIDE NEW PICTOGRAM TYPE EXIT SIGN AS INDICATED AND CONNECT TO NEW EMERGENCY BATTERY UNIT WITHIN THE UNIT.

LIGHTING FIXTURE SCHEDULE

TYPE	DESCRIPTION	CATALOG NUMBER	LAMPS PER FIXTURE				VOLT	MOUNTING	REMARKS
			QTY	TYPE	WATTS	COLOUR			
1	NEW 1220mm LENSED LED STRIP LIGHT	STANDPRO LIGHTING L2SSS-48LS2-W/40K	1	LED	46W	4000K	120V	SURFACE	
2	NEW 610mm LED VANITY LIGHT	STANDPRO LIGHTING XX	1	LED	XXW	4000K	120V	SURFACE WALL	COORDINATE EXACT LOCATION AND MOUNTING HEIGHT WITH ARCHITECTURAL DRAWINGS.

Client

DATE	REVISION	REF
2019-06-18	ISSUED FOR SITE PLAN	2
2018-12-05	ISSUED FOR TENDER	1
2018-11-02	ISSUED FOR PERMIT	0
2018-10-19	ISSUED FOR COORDINATION	–
2018-09-28	ISSUED FOR 66% REVIEW	–

THE ENGINEER WAIVES ANY AND ALL RESPONSIBILITY AND LIABILITY FOR PROBLEMS WHICH ARISE FROM FAILURE TO FOLLOW THESE PLANS, SPECIFICATIONS AND THE DESIGN INTENT THEY CONVEY, OR FOR PROBLEMS WHICH ARISE FROM OTHER FAILURE TO OBTAIN AND / OR FOLLOW THE ENGINEER'S GUIDANCE WITH RESPECT TO ANY ERRORS, OMISSIONS, INCONSISTENCES, AMBIGUITIES OR CONFLICTS WHICH ARE ALLEGED.

THIS DRAWING IS THE PROPERTY OF GOODKEY WEEDMARK & ASSOCIATES LIMITED AND ALL COPYRIGHTS ARE RESERVED. NO USE OF THIS DRAWING MAY BE MADE WITHOUT EXPRESS WRITTEN CONSENT.

DO NOT SCALE DRAWINGS

L'INGÉNIEUR DÉCLINE TOUTE RESPONSABILITÉ DÉCOULANT DE PROBLÈMES FAISANT SUITE AU NON RESPECT DES PLANS, DEVIS ET DE L'INTENTION DU CONCEPT QU'ILS INCIDENT OU DE TOUS LES PROBLÈMES POUVANT RESULTER DU DÉFAUT D'OBTENIR ET / OU DE SUIVRE LES CONSEILS DE L'INGÉNIEUR EN CE QUI CONCERNE LES ERREURS, OMISSIONS, INCONSISTANCES, AMBIGUITÉS OU CONFLITS ALLÉGUÉS.

CE DESSIN EST LA PROPRIÉTÉ LITTÉRAIRE DE GOODKEY WEEDMARK & ASSOCIATES LIMITED ET TOUS LES DROITS SONT RÉSERVÉS. L'UTILISATION EST INTERDITE SANS LE CONSENTEMENT ÉCRIT DE L'AUTEUR.

NE PAS MESURER LES DESSINS A L'ÉCHELLE

Goodkey Weedmark
Consulting Engineers

GOODKEY WEEDMARK & ASSOCIATES LIMITED
1688 Woodward Dr.
Ottawa Ontario
Canada K2C 3R8
613 727-5111 Voice
613 727-5115 Fax
www.gwal.com Web

Project north
Nord du projet

Seal/Sceau
LICENSED PROFESSIONAL ENGINEER
JUN 18 2019
R. M. BOIVIN
100122674
PROVINCE OF ONTARIO

Project/Projet
VILLAGE CENTRE PLACE
NEW RETAIL BUILDING
6075 BANK STREET, GREELY, ON

Drawing title/Titre du dessin
LIGHTING
NEW WORK

Scale Echelle	AS NOTED	Project no./No. du projet	2018-509
Design by Conçu par	A. GIRARD	Drawing/Dessin	E4
Drawn by Dessiné par	A. GIRARD		
Reviewed by Examiné par	R. BOIVIN		OF 5
Date Date	JUNE 2019	Revision no: REVNO	Acad file/Fichier: –

FILENAME: Z:\2018\2018-509\Elec\2018-509-E.dwg
PLOTDATE: Jun 18, 2019 - 3:28pm

XREFS: Z:\2018\2018-509\2018-509-Sheet.dwg Z:\2018\2018-509\Elec\E-FILL.dwg Z:\2018\2018-509\Arch\2018-509-arch.dwg Z:\2018\2018-509\Arch\2018-509-SITE.dwg

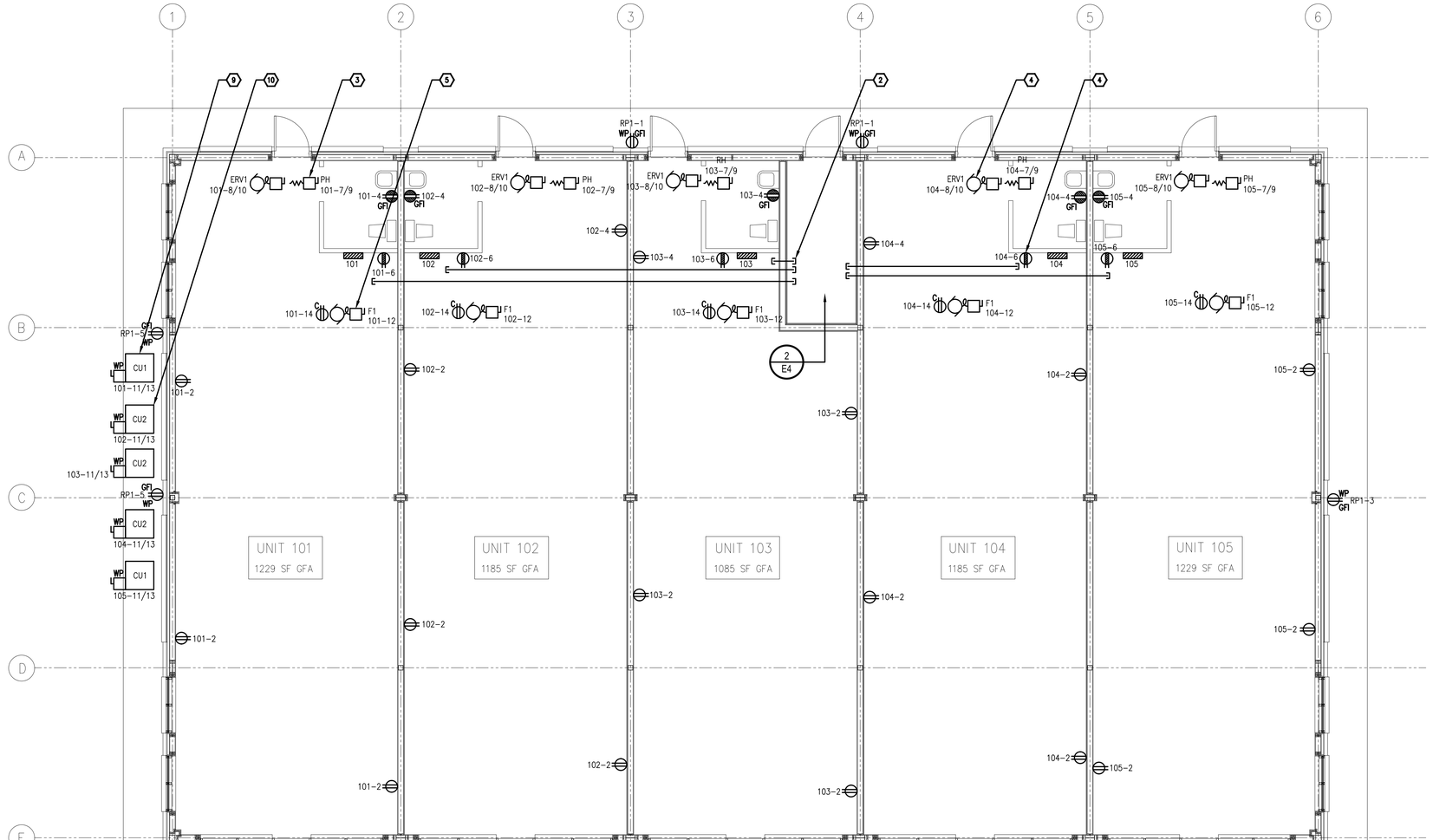

1 / E5 POWER AND SYSTEMS NEW WORK

3/16"=1'0"

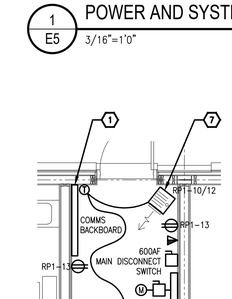

2 / E5 SERVICE ROOM DETAIL

1/4"=1'0"

DRAWING NOTES

1. PROVIDE NEW 3/4" PLYWOOD BACK BOARD C/W FIRE RETARDANT PAINT IN ELECTRICAL AS SHOWN FOR COMMUNICATIONS.
2. TYPICAL:
   PROVIDE ONE (1) 53mm EMPTY EMT CONDUIT C/W PULL STRING FROM EACH UNIT BACK TO ELECTRICAL ROOM FOR COMMUNICATIONS.
3. TYPICAL:
   PROVIDE DISCONNECT SWITCH AND CONNECTION TO NEW 208V, 1-PHASE, 4kW ELECTRIC RE-HEAT COIL 'RH' SUPPLIED AND INSTALLED BY MECHANICAL TRADES. COORDINATE EXACT LOCATION ON SITE.
4. TYPICAL:
   PROVIDE DISCONNECT SWITCH AND CONNECTION TO NEW 120V, 1-PHASE, 3.3FLA, 15MOP ENERGY RECOVERY UNIT 'ERV1'. CONNECT TO INDICATED CIRCUIT. ERV TO BE SUPPLIED AND INSTALLED BY MECHANICAL TRADES. PROVIDE ONE (1) 15A, 120V DEDICATED RECEPTACLE AS SHOWN FOR ERV CONTROLLER. COORDINATE EXACT LOCATION ON SITE.
5. TYPICAL:
   PROVIDE DISCONNECT SWITCH AND CONNECTION TO NEW 120V, 1-PHASE, 15A HEATING FURNACES F1 BY MECHANICAL TRADES. PROVIDE NEW CEILING MOUNT RECEPTACLE AS SHOWN FOR CONDENSATE PUMP. COORDINATE EXACT LOCATION ON SITE.
6. PROVIDE HARDWIRE CONNECTION TO NEW 208V, 1-PHASE, 1.5HP WELL WATER CONTROL PANEL SUPPLIED AND INSTALLED BY MECHANICAL TRADES. PROVIDE INTERCONNECTION BETWEEN CONTROL PANEL AND WELL WATER PUMP SHOWN ON DRAWING E2. COORDINATE EXACT LOCATION ON SITE WITH MECHANICAL TRADES.
7. PROVIDE NEW 208V, 1-PHASE, 2.25kW UNIT HEATER AS INDICATED EQUAL TO STELPRO RUH SERIES C/W HEATING/COOLING, WALL MOUNTED LINE VOLTAGE THERMOSTAT AS SHOWN. CONNECT TO INDICATED CIRCUIT. NEW THERMOSTAT SHALL CONTROL BOTH UNIT HEATER AND EXHAUST FAN EF1.
8. PROVIDE DISCONNECT SWITCH AND CONNECTION TO NEW 120V, 1-PHASE, 0.72FLA EXHAUST FAN EF1 AND UNIT MOUNT SPEED CONTROLLER. TRANSFER FAN TO BE SUPPLIED AND INSTALLED BY MECHANICAL TRADES. SPEED CONTROLLER TO BE SUPPLIED BY MECHANICAL TRADES, INSTALLED AND WIRED BY THIS CONTRACTOR. PROVIDE INTERCONNECTION BETWEEN EXHAUST FAN AND WALL MOUNTED HEATING/COOLING THERMOSTAT. COORDINATE EXACT LOCATION ON SITE.
9. TYPICAL:
   PROVIDE WEATHERPROOF DISCONNECT SWITCH AND CONNECTION TO NEW 208V, 1-PHASE, 21.4MCA, 35MOP CONDENSER UNIT CU1. CONNECT TO INDICATED CIRCUIT. CONDENSER UNIT TO BE SUPPLIED AND INSTALLED BY MECHANICAL TRADES. REFERENCE MECHANICAL DRAWINGS FOR EXACT LOCATION.
10. TYPICAL:
    PROVIDE WEATHERPROOF DISCONNECT SWITCH AND CONNECTION TO NEW 208V, 1-PHASE, 18.8MCA, 30MOP CONDENSER UNIT CU2. CONNECT TO INDICATED CIRCUIT. CONDENSER UNIT TO BE SUPPLIED AND INSTALLED BY MECHANICAL TRADES. REFERENCE MECHANICAL DRAWINGS FOR EXACT LOCATION.

Client

DATE	REVISION	REF
2019-06-18	ISSUED FOR SITE PLAN	2
2018-12-05	ISSUED FOR TENDER	1
2018-11-02	ISSUED FOR PERMIT	0
2018-10-19	ISSUED FOR COORDINATION	–
2018-09-28	ISSUED FOR 66% REVIEW	–

THE ENGINEER WAIVES ANY AND ALL RESPONSIBILITY AND LIABILITY FOR PROBLEMS WHICH ARISE FROM FAILURE TO FOLLOW THESE PLANS, SPECIFICATIONS AND THE DESIGN INTENT THEY CONVEY, OR FOR PROBLEMS WHICH ARISE FROM OTHER FAILURE TO OBTAIN AND / OR FOLLOW THE ENGINEER'S GUIDANCE WITH RESPECT TO ANY ERRORS, OMISSIONS, INCONSISTENCES, AMBIGUITIES OR CONFLICTS WHICH ARE ALLEGED.

THIS DRAWING IS THE PROPERTY OF GOODKEY WEEDMARK & ASSOCIATES LIMITED AND ALL COPYRIGHTS ARE RESERVED. NO USE OF THIS DRAWING MAY BE MADE WITHOUT EXPRESS WRITTEN CONSENT.

DO NOT SCALE DRAWINGS

L'INGÉNIEUR DÉCLINE TOUTE RESPONSABILITÉ DÉCOULANT DE PROBLÈMES FAISANT SUITE AU NON RESPECT DES PLANS, DEVIS ET DE L'INTENTION DU CONCEPT QU'ILS INDIQUENT OU DE TOUS LES PROBLÈMES POUVANT RESULTER DU DÉFAUT D'OBTENIR ET / OU DE SUIVRE LES CONSEILS DE L'INGÉNIEUR EN CE QUI CONCERNE LES ERREURS, OMISSIONS, INCONSISTANCES, AMBIGUITÉS OU CONFLITS ALLÉGUÉS.

CE DESSIN EST LA PROPRIÉTÉ LITTÉRAIRE DE GOODKEY WEEDMARK & ASSOCIATES LIMITED ET TOUS LES DROITS SONT RÉSERVÉS. L'UTILISATION EST INTERDITE SANS LE CONSENTEMENT ÉCRIT DE L'AUTEUR.

NE PAS MESURER LES DESSINS A L'ÉCHELLE

Goodkey Weedmark
Consulting Engineers

GOODKEY WEEDMARK & ASSOCIATES LIMITED
1688 Woodward Dr. — 613 727-5111 Voice
Ottawa Ontario — 613 727-5115 Fax
Canada K2C 3R8 — www.gwal.com Web

Project north / Nord du projet

Seal/Sceau

LICENSED PROFESSIONAL ENGINEER — JUN 18 2019 — R. M. BOIVIN — 100122674 — PROVINCE OF ONTARIO

Project/Projet

VILLAGE CENTRE PLACE
NEW RETAIL BUILDING
6075 BANK STREET, GREELY, ON

Drawing title/Titre du dessin

POWER AND SYSTEMS
NEW WORK

Scale / Echelle	AS NOTED	Project no./No. du projet	2018-509
Design by / Conçu par	A. GIRARD	Drawing/Dessin	E5
Drawn by / Dessiné par	A. GIRARD		
Reviewed by / Examiné par	R. BOIVIN		OF 5
Date	JUNE 2019	Revision no: REVNO	Acad file/Fichier: –

XREFS: Z:\2018\2018-509\2018-509-Sheet.dwg Z:\2018\2018-509\Elec\E-FILL.dwg Z:\2018\2018-509\Arch\2018-509-arch.dwg Z:\2018\2018-509\Arch\2018-509-SITE.dwg

FILENAME: Z:\2018\2018-509\Elec\2018-509-E.dwg
PLOTDATE: Jun 18, 2019 – 3:28pm