BARRIER-FREE UNIVERSAL WASHROOM NOTES

BASE BUILDING CONSTRUCTION:
WASHROOM PARTITIONS TO BE 2X4 WD STUD FRAMING FULL HEIGHT WITH ½" GYPSUM BRD BOTH SIDES (EXCEPT FOR TENANT DEMISING WALLS), ¾" PLYWOOD BACKING FOR WALL MOUNTED SINK AND GRAB BARS AS INDICATED AND AS PER OBC 3.8.3.8.(5) & (6). INSTALLER TO INDICATE LOCATION OF WALL BACKING ON GYP. BRD FOR FUTURE TENANT FIXTURE INSTALLATION.
PROVIDE ROXUL SAFE 'N' SOUND MINERAL BATT FILLED WALL CAVITIES.

CONSTRUCT ROUGH OPENING FOR 38"x84" STEEL DOOR ON STEEL FRAME WITH CLEAR OPENING WIDTH OF 2.82' (0.860m) AS PER OBC 3.8.3.3.(1). IN-SWINGING DOOR TO BE PROVIDED WITH A POWER OPERATOR WITH SELF-CLOSING DEVICE AS PER OBC 3.8.3.3.(6)(a), DOOR LATCH AS PER OBC 3.8.3.12. (1) (b)(i).

FUTURE TENANT FIT-UP:
ALL FIXTURES TO COMPLY WITH OBC 3.8.3.12., FOR WATER CLOSET, LAVATORY, GRAB BARS, COAT HOOK, MIRROR, TOILET PAPER DISPENSER, ETC.
ADULT CHANGE TABLE NOT REQUIRED FOR RETAIL SPACE LESS THAN 300m2 OR 3230sf IN AREA.
PROVIDE NON-SLIP FLOOR FINISH SLOPING TO DRAIN.

NOTE: 22" X 36" ATTIC ACCESS CLOSURE
OBC 9.19.2. & 9.10.3.1. – MINIMUM 45min FIRE RATED.
DOOR EQUAL TO CENDREX – 1HR. RATED FOR COMBUSTIBLE ASSEMBLY
STANDARDS LISTED: NFPA 252-2003, CAN/ULC S112 M90-R2001, CAN/ULC S104-10

ALL BARRIER-FREE FRONT ENTRY DOORS TO BE 38"x 84" ON METAL FRAME, EQUIPPED WITH A POWER OPERATOR WITH SELF CLOSING DEVICE IN ACCORDANCE WITH OBC 3.8.3.3 (4).

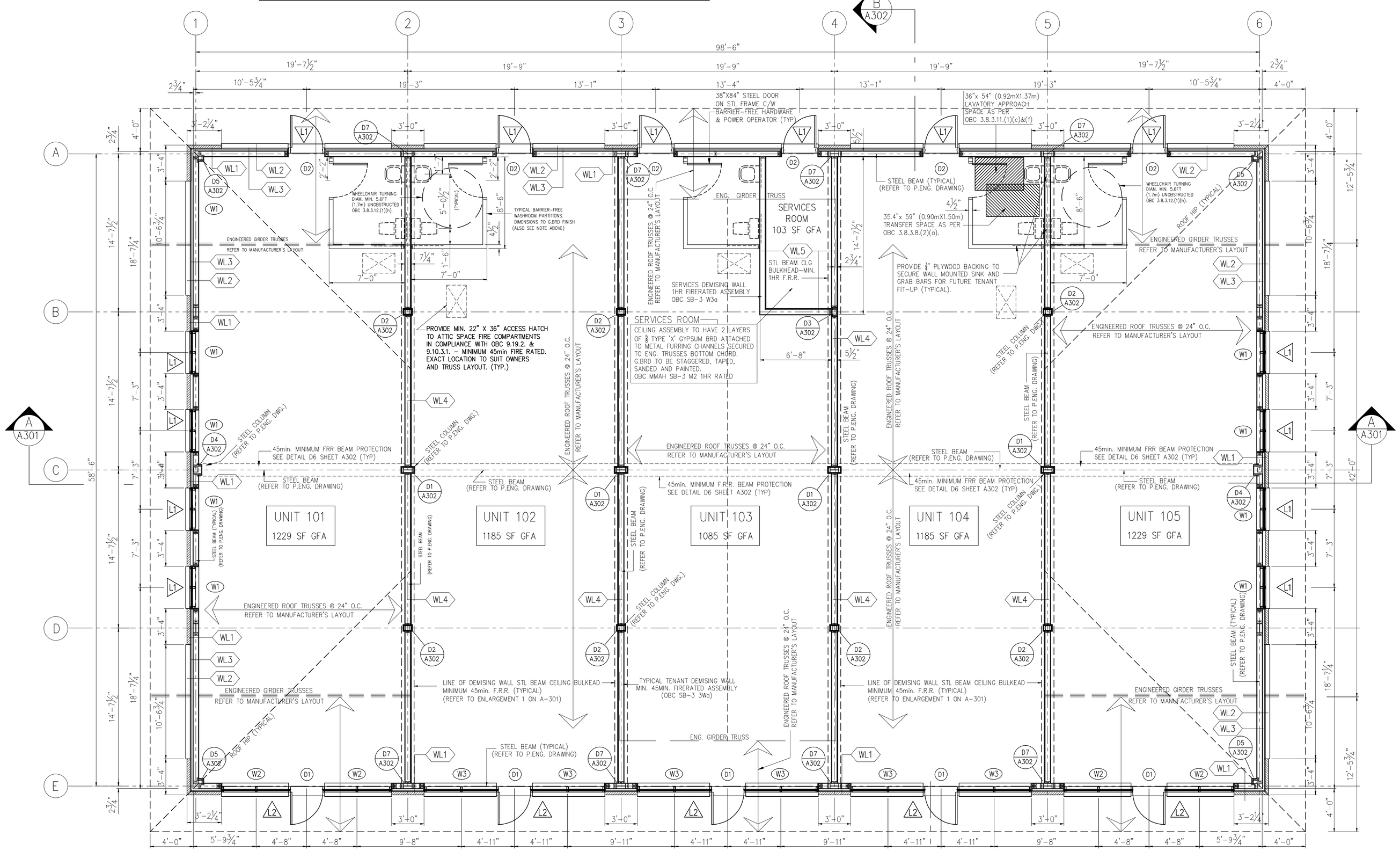

FLOOR PLAN (BASE BUILDING 'D' ONLY)

(RETAIL UNITS PREPARED READY FOR TENANT FIT-UP)

GROSS FLOOR AREA = 6020sf

SCALE: 3/16" = 1'-0"

WOOD LINTEL LEGEND: L1 L2

L1 MAXIMUM SPAN 6'-6 1/2" (2070mm) – 2PLY 2X6 SPF ON 2X6 KING + 2X6 JACK EACH END

L2 MAXIMUM SPAN 16'-8" (5078mm) – 3PLY 2X10 SPF ON 2X6 KING + 2PLY 2X6 JACK EACH END

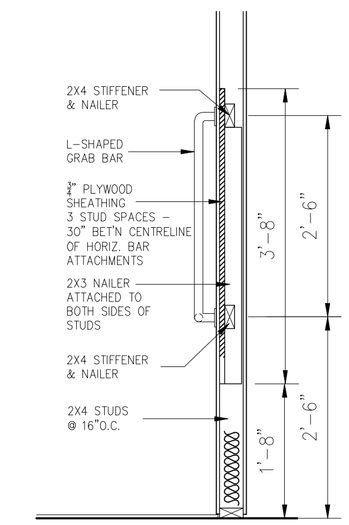

WALL BACKING DETAIL
@ L-SHAPED GRAB BAR

SCALE: ¾"=1'-0"

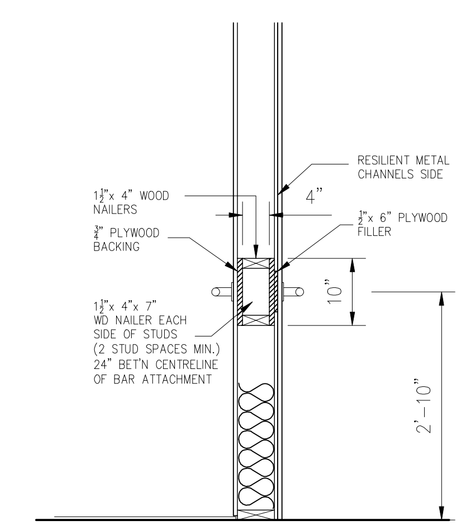

WALL BACKING DETAIL
@ W.C. HORIZONTAL GRAB BAR

SCALE: ¾"=1'-0"

MALETTE
DESIGN
BCIN No. 112887
TEL: 613-762-6069
malettedesign@yahoo.ca

I, GILLES MALETTE, REVIEW AND TAKE RESPONSIBILITY FOR THE DESIGN WORK ON BEHALF OF A FIRM REGISTERED UNDER SUBSECTION 3.2.4. OF DIVISION C, OF THE BUILDING CODE EDITION 2012.

I AM QUALIFIED, AND THE FIRM IS REGISTERED IN THE APPROPRIATED CLASSES/CATEGORIES.

INDIVIDUAL BCIN: 26217
FIRM BCIN: 112887

ALL WORK TO BE DONE IN ACCORDANCE WITH THE 2012 EDITION OF THE ONTARIO BUILDING CODE.

IT IS THE RESPONSIBILITY OF THE INDIVIDUAL CONTRACTOR TO CHECK AND VERIFY ALL DIMENSIONS ON SITE AND TO REPORT ANY DISCREPANCIES TO THE DESIGNER AND/OR CONSULTANTS.

CONTRACTORS MUST COMPLY WITH ALL PERTINENT CODES AND BY-LAWS.

CONFIRM LOCATION OF ALL UNDERGROUND SERVICES PRIOR TO EXCAVATION.

DO NOT SCALE DRAWINGS. COPYRIGHT RESERVED.

CONSULTANTS:

No.		DATE
10	REVISED TO CITY COMMENTS	AUG 20/19
09	REVISED TO CITY COMMENTS	JULY 12/19
09	REVISED TO NEW SITE PLAN, NEW PROJECT ADDRESS & FOR PERMIT	MAY 28/19
08	RE-SIZED WASHROOM & FOR PERMIT	NOV 16/18
07	REVISED TO 5 RETAIL UNITS WITH CORRECTIONS TO ALL DWGS & SUBMITTED FOR FINAL REVIEW.	OCT 22/18
06	SUBMITTED FOR M&E P.ENG.	AUG 31/18
05	SUBMITTED FOR STRUCTURAL	MAR 9/18
04	SUBMITTED FOR ENGINEERING	SEPT 16/13
03	REVISED FOR CLIENT REVIEW	JUNE 29/12
02	REVISED FOR CLIENT REVIEW	APR 24/12
01	SUBMITTED FOR CLIENT REVIEW	APR 23/12

PROJECT TITLE:

PROPOSED
1 STOREY BUILDING

6075 BANK ST.
GREELY, ON

DRAWING TITLE:

FLOOR PLAN

PROJECT No. :

DATE:
APRIL 20, 2012

SCALE:
AS NOTED

DWG BY: G. MALETTE
BCIN No. 26217

DWG No:
A-102