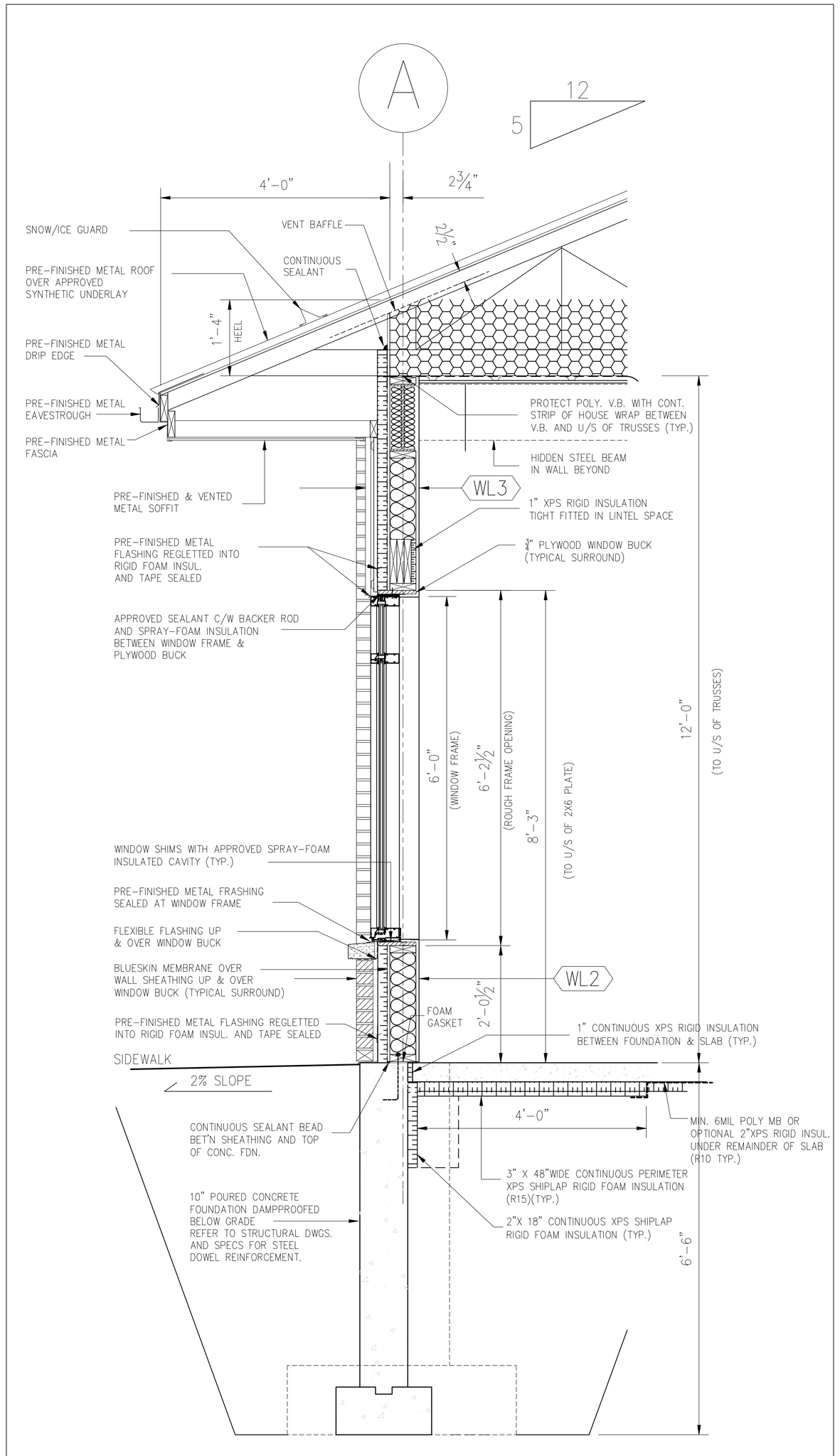

EXTERIOR WALL SECTION

SCALE: 3/4"=1'-0"

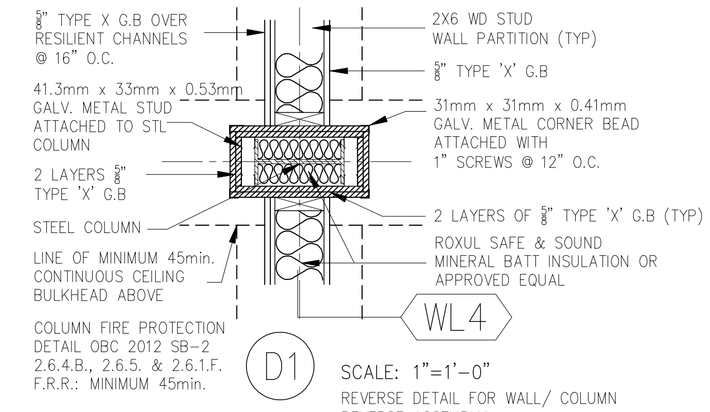

D1 SCALE: 1"=1'-0"

REVERSE DETAIL FOR WALL/ COLUMN REVERSE ASSEMBLY

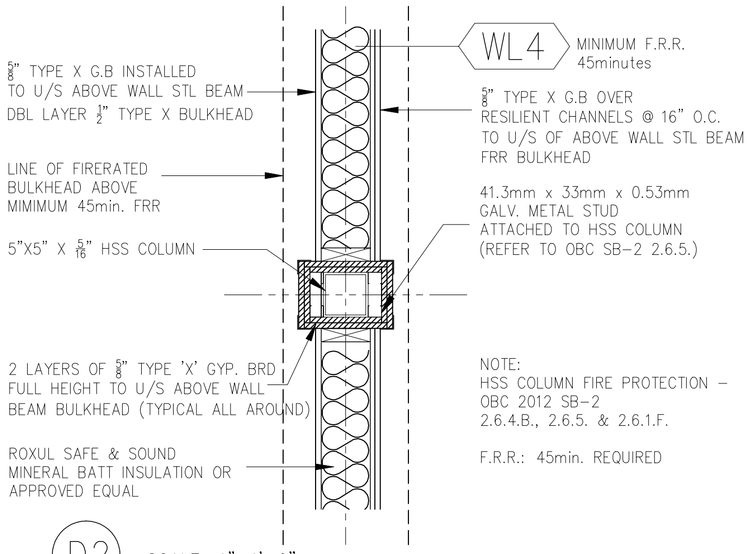

D2 SCALE: 1"=1'-0"

REVERSE DETAIL FOR WALL/COLUMN REVERSE ASSEMBLY

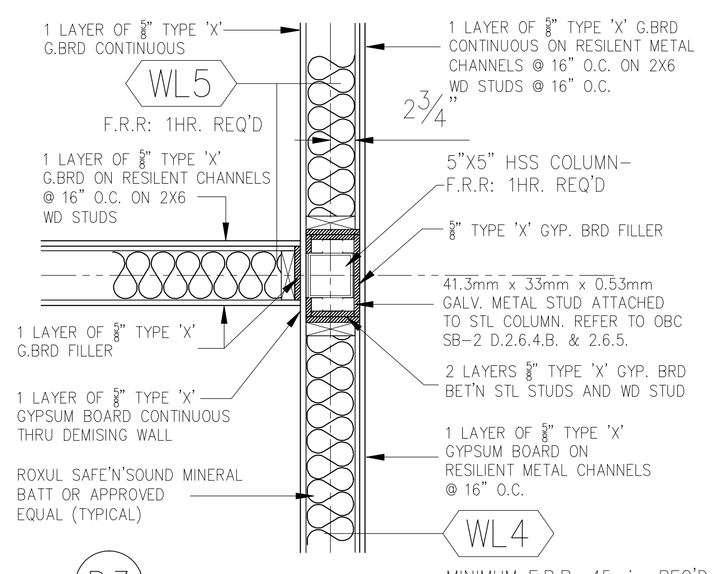

D3 SCALE: 1"=1'-0"

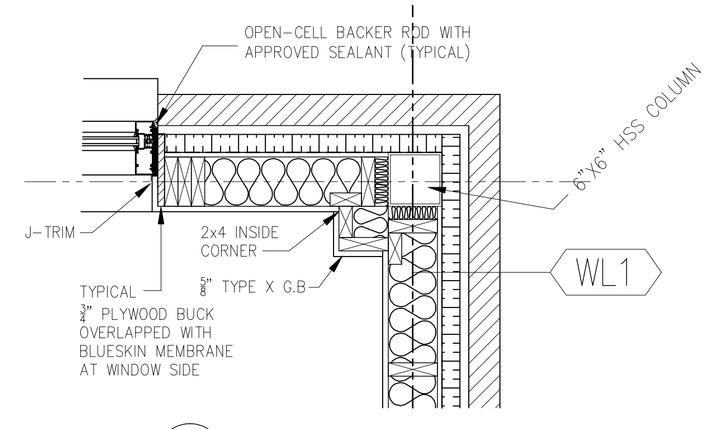

D5 SCALE: 1"=1'-0"

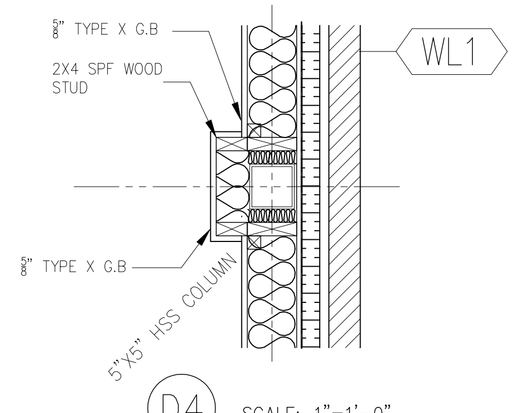

D4 SCALE: 1"=1'-0"

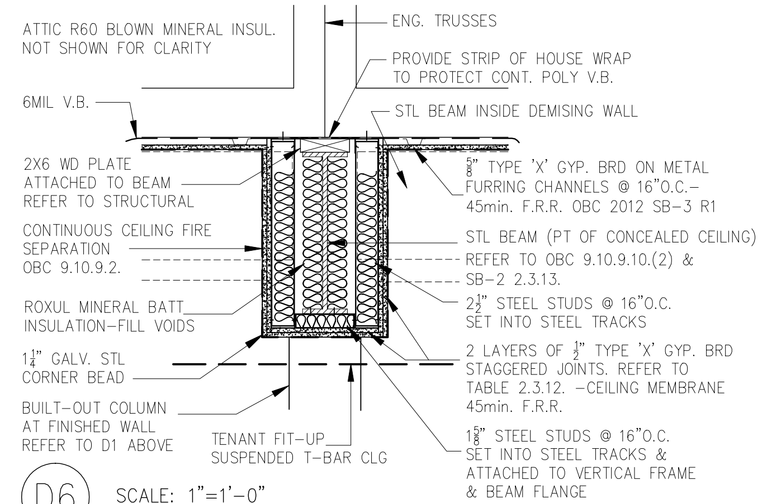

D6 SCALE: 1"=1'-0"

* STL BEAM CEILING BULKHEAD – 45min. F.R.R. MEMBRANE OBC TABLE 2.3.12. & CONSTRUCTED AS PART OF THE CEILING CONTINUOUS BARRIER MEMBRANE IN COMPLIANCE WITH OBC 9.10.9.2. & 9.10.9.10.(2).

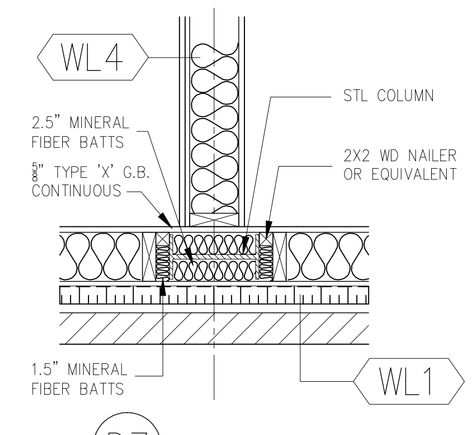

D7 SCALE: 1"=1'-0"

Item	Ontario Building Code Data Matrix Parts 3 & 9	OBC 2012 Reference
1	Project Description: ☒ New ☐ Addition ☐ Alteration ☐ Change of Use ☐ Part 11	☐ Part 3 ☒ Part 9
		1.1.2.4. (A) 9.10.1.3.
2	Major Occupancy(s): D (BUILDING 1 ON SITE PLAN)	3.1.2.1.(1) / 9.10.2.
3	Building Area (sq.m.) 557.4 m2	1.4.1.2. (A) / 1.4.1.2. (A)
4	Gross Floor Area (sq.m.) 559.26 m2	1.4.1.2. (A) / 1.4.1.2. (A)
5	Number of Storeys: Above grade 1 Below grade 0	1.4.1.2. (A) & 3.2.1.1. / 1.4.1.2. (A) & 9.10.4.
6	Height of building (m.) 6.61 m Mid-roof line from average grade	
7	Number of Streets/Access Routes: 3	3.2.2.10. & 3.2.5. / 9.10.20.
8	Building Classification: 3.2.2.55	3.2.2.20.-83. / 9.10.2.
9	Sprinkler System Proposed: ☐ Entire building ☐ Addition only ☐ In lieu or roof rating ☒ Not required Note:	3.2.2.20.-83. / 9.10.8.2. 3.2.1.5. 3.2.2.17.
10	Standpipe required: ☐ Yes ☒ No	3.2.9. / N/A
11	Fire Alarm required: ☐ Yes ☒ No	3.2.4. / 9.10.18.
12	Water Service/Supply is Adequate: ☒ Yes ☐ No	3.2.5.7. / N/A
13	High building: ☐ Yes ☒ No	3.2.6. / N/A
14	Permitted Construction: ☐ Combustible ☐ Non-combustible ☒ Both	3.2.2.20.-83. / 9.10.6.
15	Mezzanine(s) Area (sq.m.) N/A	3.2.1.1.(3)-(8) / 9.10.4.1.
16	Occupant load based on: ☐ sq.m./person ☒ design of building Offices Occupancy ____ Load ____ persons Showroom: Occupancy ____ Load ____ persons Business, Personal services: Occupancy 4.6 pers/m2 Load 120 persons Garage: Occupancy ____ Load ____ persons	3.1.17. / 9.9.1.3.
17	Barrier-free Design: ☒ Yes ☐ No (Explain)	3.8. / 9.5.2.
18	Hazardous Substance: ☐ Yes ☒ No	3.3.1.2. & 3.3.1.19. / 9.10.1.3. (4)
19	Required Fire Resistance Rating (F.R.R.) Horizontal Assemblies F.R.R. (Hours) — Listed Design No. or Description (SB-2) Floors 3/4 Hours — N/A Slab-on-grade Roof 0 Hours — 3/4 HR. Ceiling Provided (SB-3 R1) Mezzanine N/A Hours — 1 HR. Clg Service Rm (SB-3 M2) F.R.R. of Supporting Members — Listed Design No. or Description (SB-2) Floors 3/4 Hours — N/A Roof 3/4 Hours — OBC SB-2 2.6.4., 2.6.5., 2.6.1.F. Mezzanine N/A Hours	3.2.2.20.-83. & 3.2.1.4. / 9.10.8. 9.10.9.
20	Spatial Separation - Construction of Exterior Walls	3.2.3. / 9.10.14.

Wall	Area of EBF (sq.m.)	L.D. (m.)	L/H or H/L	Permitted Max. % of Openings	Proposed % of Openings	F.R.R. (Hours)	Listed Design or Description	Combustible Construction	Non-Combustible Construction	Comb. Cladding	Non-Comb. Cladding
North/West	66.3	21.9	5.0	39.6	12.9	3/4hr	SB-2 2.3.4.A,C,D	X			X
South/East	66.3	3.0	5.0	16.0	12.9	1hr	SB-2 2.3.4.A,C,D	X			X
South/West	110.5	24.5	8.4	100	0.05	NA		X			X
North/East	110.5	21.3	8.4	100	40.8	NA		X			X

21	Other - Describe Combustible Insulation is permitted in roof and wall compositions as per 3.1.5.3 and 3.1.5.12
22	Energy Efficiency Design Compliance Path: SB-10 Division 5 Building Envelope Requirements for Climate Zone 1 for Non-residential Occupancy Part 9 Buildings - APPLIED
23	Fenestration %: Front = 41%, Rear = 0%, Sides = 13% each. Ratio to wall surfaces: Total wall area = 4406sf , Total fenestration area = 872sf - 19.8% RATIO

MALETTE DESIGN
BCIN No. 112887
TEL: 613-762-6069
malettedesign@yahoo.ca

I, GILLES MALETTE, REVIEW AND TAKE RESPONSIBILITY FOR THE DESIGN WORK ON BEHALF OF A FIRM REGISTERED UNDER SUBSECTION 3.2.4. OF DIVISION C, OF THE BUILDING CODE EDITION 2012.

I AM QUALIFIED, AND THE FIRM IS REGISTERED IN THE APPROPRIATED CLASSES/CATEGORIES.

INDIVIDUAL BCIN: 26217
FIRM BCIN: 112887

ALL WORK TO BE DONE IN ACCORDANCE WITH THE 2012 EDITION OF THE ONTARIO BUILDING CODE.

IT IS THE RESPONSIBILITY OF THE INDIVIDUAL CONTRACTOR TO CHECK AND VERIFY ALL DIMENSIONS ON SITE AND TO REPORT ANY DISCREPANCIES TO THE DESIGNER AND/OR CONSULTANTS.

CONTRACTORS MUST COMPLY WITH ALL PERTINENT CODES AND BY-LAWS.

CONFIRM LOCATION OF ALL UNDERGROUND SERVICES PRIOR TO EXCAVATION.

DO NOT SCALE DRAWINGS. COPYRIGHT RESERVED

CONSULTANTS:

No.		DATE
10	REVISED TO CITY COMMENTS	AUG 20/19
09	REVISED TO CITY COMMENTS	JULY 12/19
08	REVISED MATRIX PER NEW SITE PLAN AND REVISED PROJECT ADDRESS	MAY 28/19
07	FOR PERMIT	NOV 16/18
06	REVISED TO 5 RETAIL UNITS WITH CORRECTIONS TO ALL DWGS & SUBMITTED FOR FINAL REVIEW.	OCT 22/18
05	SUBMITTED FOR M&E P.ENG.	AUG 31/18
04	RE-SUBMITTED FOR STRUCTURAL	MAR 9/18
03	REVISED FOR CLIENT REVIEW	JUNE 29/12
02	REVISED FOR CLIENT REVIEW	APR 24/12
01	SUBMITTED FOR CLIENT REVIEW	APR 23/12

PROJECT TITLE:

PROPOSED 1 STOREY BUILDING

6075 BANK ST. GREELY, ON

DRAWING TITLE:

PROJECT MATRIX

WALL SECTION AND DETAILS

PROJECT No. :

DATE: APRIL 20, 2012

SCALE: AS NOTED

DWG BY: G. MALETTE
BCIN No. 26217

DWG No: **A-302**